# 3GPP TS 38.523-3 V16.0.0 (2020-12)

*Technical Specification*

**3rd Generation Partnership Project;**

**Technical Specification Group Radio Access Network;**

**5GS;**

**User Equipment (UE) conformance specification;**

# Part 3: Protocol Test Suites

# (Release 16)

The present document has been developed within the 3rd Generation Partnership Project (3GPP ™) and may be further elaborated for the purposes of 3GPP.
The present document has not been subject to any approval process by the 3GPP Organizational Partners and shall not be implemented.
This Specification is provided for future development work within 3GPP only. The Organizational Partners accept no liability for any use of this Specification.
Specifications and Reports for implementation of the 3GPP ™ system should be obtained via the 3GPP Organizational Partners' Publications Offices.

Keywords

5GS, UE, terminal, testing

***3GPP***

Postal address

3GPP support office address

650 Route des Lucioles - Sophia Antipolis
Valbonne - FRANCE
Tel.: +33 4 92 94 42 00 Fax: +33 4 93 65 47 16

Internet

http://www.3gpp.org

***Copyright Notification***

No part may be reproduced except as authorized by written permission.
The copyright and the foregoing restriction extend to reproduction in all media.

© 2020, 3GPP Organizational Partners (ARIB, ATIS, CCSA, ETSI, TSDSI, TTA, TTC).
All rights reserved.

UMTS™ is a Trade Mark of ETSI registered for the benefit of its members
3GPP™ is a Trade Mark of ETSI registered for the benefit of its Members and of the 3GPP Organizational Partners
LTE™ is a Trade Mark of ETSI registered for the benefit of its Members and of the 3GPP Organizational Partners
GSM® and the GSM logo are registered and owned by the GSM Association

# Contents

Foreword....9

1 Scope....10

2 References....10

3 Definitions, symbols and abbreviations....11

3.1 Definitions....11

3.2 Symbols....12

3.3 Abbreviations....12

4 Test system architecture....13

4.1 General system architecture....13

4.2 Component architecture....13

5 Test models....14

5.1 EN-DC....14

5.1.1 Layer 3....14

5.1.1.1 Single NR carrier....14

5.1.1.2 NR carrier aggregation....17

5.1.2 Layer 2....18

5.1.2.1 PDCP....18

5.1.2.2 RLC....19

5.1.2.3 MAC....20

5.1.2.3.1 Single NR carrier....20

5.1.2.3.2 NR carrier aggregation....22

5.2 NR/5GC....23

5.2.1 Layer 3....23

5.2.1.1 Single NR carrier....23

5.2.1.2 NR carrier aggregation....24

5.2.1.3 NR/E-UTRA Inter-RAT....25

5.2.1.4 NR supplementary uplink....26

5.2.1.5 NR dual connectivity....27

5.2.2 Layer 2....29
5.2.2.1 SDAP....29
5.2.2.2 PDCP....30
5.2.2.2.1 Single NR carrier....30
5.2.2.2.2 NR dual connectivity....31
5.2.2.3 RLC....32
5.2.2.4 MAC....33
5.2.2.4.1 Single NR carrier....33
5.2.2.4.2 NR carrier aggregation....34
6 System interface....35
6.1 Upper tester interface....35
6.2 Abstract system primitives....35
6.2.1 Introduction....35
6.2.2 General requirements and assumptions....35
6.2.3 E-UTRAN ASP definitions....35
6.2.4 NR ASP definitions....35
7 Test methods and design considerations....36
7.1 Common aspects....36
7.1.1 Introduction....36
7.1.2 Physical layer aspects....36
7.1.2.1 Search spaces and DCI....36
7.1.2.1.1 Parameters....36
7.1.2.2.1.1 Search space configuration....36
7.1.2.1.2 PDCCH search spaces....36
7.1.2.1.3 DCI formats....37
7.1.2.1.3.1 Introduction....37
7.1.2.1.3.2 Timing....37
7.1.2.1.3.3 DAI....37
7.1.2.1.4 PDCCH candidate selection....37
7.1.2.2 Downlink resource allocation....38
7.1.2.2.1 Parameters....38

7.1.2.2.1.1 Time domain resource allocation....38
7.1.2.2.1.2 Frequency domain resource allocation configured at the UE via RRC signalling....39
7.1.2.2.1.3 DCI parameters....39
7.1.2.2.2 Timing....40
7.1.2.2.3 DL scheduling scheme....41
7.1.2.2.3.1 DL scheduling scheme: Frequency domain multiplexing, RA type1, non-interleaved....42
7.1.2.2.4 Transport block size determination....42
7.1.2.2.4.1 Parameters affecting TBS determination....42
7.1.2.2.4.2 Automatic mode - Determination of TBS and corresponding $\mathbf{I_{MCS}}$ and $\mathbf{L_{RBs}}$....46
7.1.2.2.4.3 Explicit mode - Determination of $\mathbf{I_{MCS}}$ and $\mathbf{L_{RBs}}$ for given TBS....47
7.1.2.3 Uplink grant....47
7.1.2.3.1 General principles and grant allocation types....47
7.1.2.3.1.1 PUCCH synchronisation in connected mode....47
7.1.2.3.1.2 Grant allocation types....47
7.1.2.3.1.2.1 Grant allocation by RACH procedure....47
7.1.2.3.1.2.2 Grant allocation type 1: Uplink grant triggered by SR....48
7.1.2.3.1.2.3 Grant allocation type 2: Periodic uplink grant....48
7.1.2.3.1.2.4 Grant allocation type 3: Single uplink grant....48
7.1.2.3.1.2.5 Grant allocation type 4: Periodic uplink grant triggered by SR....48
7.1.2.3.2 Determination of explicit uplink grants....48
7.1.2.3.2.1 Parameters....48
7.1.2.3.2.2 Determination of $\mathbf{I_{MCS}}$ and $\mathbf{L_{RBs}}$ for given TBS....50
7.1.2.3.3 Default grants....51
7.1.2.5 Noise generator....55
7.1.3 System information....55
7.1.4 Cell(s) handling....55
7.1.4.1 Multi-cells environment....55
7.1.4.2 Cell power change....55
7.1.5 Timing aspects....55
7.1.5.1 SS time....55
7.1.5.2 Cell(s) timing....55
7.2 EN-DC....56

7.2.1 Introduction....56
7.2.2 Physical layer aspects....56
7.2.2.1 Search spaces and DCI....56
7.2.3 System information....56
7.2.4 Bearers....57
7.2.5 Random Access procedure....57
7.2.6 PSCell change....57
7.2.6.1 Sequence of EN-DC NR inter-cell PSCell change....57
7.2.6.2 Sequence of EN-DC NR intra-cell PSCell change....57
7.2.6.3 UL grants used in RA procedure during EN-DC NR PSCell change....58
7.2.6.4 Sequence of EN-DC NR CA inter-cell PSCell change....58
7.3 NR/5GC....59
7.3.1 Introduction....59
7.3.2 Physical layer aspects....59
7.3.3 System information....59
7.3.3.1 General SS requirements....59
7.3.3.2 Scheduling information....59
7.3.3.3 System information modification....63
7.3.3.4 Request for on demand system information....63
7.3.4 Paging and Short Message....63
7.3.5 RRC connection control....64
7.3.5.1 Early contention resolution....64
7.3.5.2 RRC connection release sequence....64
7.3.5.3 Handover....65
7.3.5.3.1 Sequence of intra-NR inter-cell handover....65
7.3.5.3.2 Sequence of intra-NR intra-cell handover....65
7.3.5.3.3 UL grants used in RA procedure during handover....66
7.3.5.3.4 Sequence of intra-NR inter-cell CA handover....66
7.3.5.4 RRC connection re-establishment....67
7.3.5.5 NR-DC PSCell change....68
7.3.5.5.1 Sequence of NR-DC inter-cell PSCell change....68
7.3.6 Bearers....69

7.3.6.1 DRB Identity Management....69

8 Other SS requirements with TTCN-3 impact....69

8.1 Codec requirements....69

8.2 External function definitions....69

9 IXIT proforma....71

9.1 Introduction....71

9.2 E-UTRA and NR PIXIT....71

9.3 5GC PIXIT....72

10 Postambles....72

10.1 Introduction....72

10.2 On E-UTRA/EPC....72

10.2.1 UE postamble states and procedures....72

10.2.2 Switch/Power off procedure in State E1....73

10.2.3 Switch/Power off procedure in States E2 and E3....73

10.2.3.1 Procedure for E2 and E3....73

10.2.3.2 Procedure for E2_T3440....74

10.2.4 Switch/Power off procedure in State E4....74

10.2.5 Automatic selection mode procedure in State E5 (current cell, neighbour cell)....74

10.3 On NR/5GC....74

10.3.1 UE postamble states and procedures....74

10.3.2 Switch/Power off procedure in State 1N-A....75

10.3.3 Switch/Power off procedure in State 2N-A....75

10.3.4 Switch/Power off procedure in State 3N-A....75

10.3.4A Switch/Power off procedure in State 3N-A with T3540 started....75

10.3.5 Switch/Power off procedure in NR DEREGISTERED....75

11 Guidelines on test execution....76

11.1 Introduction....76

11.2 EN-DC....76

11.2.1 Single NR carrier....76

11.3 NR/5GC....76

11.3.1 NR/5GC single RAT....76

11.3.1.1 Single NR carrier....76

11.3.1.2 NR carrier aggregation....77

11.3.2 NR/5GC Inter-RAT....77

11.3.2.1 NR/E-UTRA Inter-RAT....77

11.3.3 NR MFBI....78

**Annex A (normative): Test Suites....79**

A.1 Baseline of specifications....79

A.2 5GS Test Suites....79

A.2.1 EN-DC Test Suites....79

A.2.2 NR/5GC Test Suites....82

**Annex B: NR TBS tables 88**

B.1 Downlink TBS (normative)....88

B.1.1 Downlink TBS using MCS index table 5.1.3.1-1....88

B.1.1.1 Downlink TBS using MCS index table 5.1.3.1-1, dmrs-AdditionalPosition = 0, number of CDM groups = 1....88

B.1.1.2 Downlink TBS using MCS index table 5.1.3.1-1, dmrs-AdditionalPosition = 1, number of CDM groups = 1....89

B.1.1.3 Downlink TBS using MCS index table 5.1.3.1-1, dmrs-AdditionalPosition = 2, number of CDM groups = 2, modulation order <= 2....89

B.1.1.4 Downlink TBS using MCS index table 5.1.3.1-1, dmrs-AdditionalPosition = 2, number of CDM groups = 2....91

B.1.2 Void....91

B.2 Uplink TBS (informative)....91

B.2.1 Uplink TBS using MCS index table 5.1.3.1-1....92

B.2.1.1 Uplink TBS using MCS index table 5.1.3.1-1, dmrs-AdditionalPosition = 0, number of CDM groups = 1....92

B.2.1.2 Uplink TBS using MCS index table 5.1.3.1-1, dmrs-AdditionalPosition = 1, number of CDM groups = 1....93

B.2.1.3 Void....94

B.2.1.4 Void....94

B.2.1.5 Uplink TBS using MCS index table 5.1.3.1-1, dmrs-AdditionalPosition = 2, number of CDM groups = 2 ....94

B.2.2 Void....95

B.2.3 Void....95

**Annex C (informative): Style guide and design principles....95**

C.1 Style guide....95

C.2 Design principles....95

**Annex D (normative): TTCN-3 definitions....96**

D.0 Introduction....96

D.1 NR_ASP_TypeDefs....96

D.1.1 ASN1_Container....96

D.1.2 System_Configuration....100

D.1.3 Cell_Configuration....101

D.1.3.1 Cell_Configuration_Common....102

D.1.3.2 PhysicalLayer....105

D.1.3.2.1 PhysicalLayer_Common....105

D.1.3.2.2 PhysicalLayer_Downlink....106

D.1.3.2.2.1 SS_PBCH_Block....107

D.1.3.2.2.2 CSI_Configuration....110

D.1.3.2.2.3 Cell_Level_Configuration_PDSCH....112

D.1.3.2.2.4 Downlink_BWP....113

D.1.3.2.2.4.1 PDSCH_Configuration....114

D.1.3.2.2.4.2 PDCCH_Configuration....114

D.1.3.2.2.4.2.1 Search_Space_Configuration....116

D.1.3.2.2.4.2.2 Search_Space_DCI_Assignment....118

D.1.3.2.3 PhysicalLayer_Uplink....119

D.1.3.2.3.1 Uplink_BWP....120

D.1.3.2.4 DCI_Configuration....121

D.1.3.2.4.1 Common_Fields....121

D.1.3.2.4.2 Resource_Allocation....124

D.1.3.2.4.3 PDSCH_Scheduling....128
D.1.3.2.4.4 PUSCH_Scheduling....135
D.1.3.3 MAC_Layer....140
D.1.3.3.1 MAC_Layer_Common....140
D.1.3.3.2 Random_Access_Procedure....141
D.1.3.3.2.1 Random_Access_Response....141
D.1.3.3.2.2 Contention_Resolution....144
D.1.3.4 System_Information_Control....145
D.1.3.5 Paging_Control....148
D.1.3.6 CCCH_DCCH_DTCH_Configuration....149
D.1.3.7 Cell_Group_Configuration....150
D.1.4 Cell_Power_Attenuation....151
D.1.5 Radio_Bearer_Configuration....151
D.1.5.1 RLC_Configuration....153
D.1.5.2 MAC_Configuration....155
D.1.6 AS_Security....156
D.1.7 Paging_Trigger....158
D.1.8 Delta_Value_Trigger....159
D.1.9 System_Indication_Control....159
D.1.10 PDCP_Count....160
D.1.11 PDCP_Handover....161
D.1.12 L1_Test_Mode....162
D.1.13 DCI_Trigger....162
D.1.14 System_Indications....167
D.1.15 System_Interface....167
D.2 NR_ASP_DrbDefs....168
D.2.1 PDU_TypeDefs....169
D.2.1.1 MAC_PDU....169
D.2.1.1.1 MAC_PDU_SubPDU....169
D.2.1.1.2 MAC_ControlElements....171
D.2.1.1.2.1 MAC_ControlElement_Common....172

D.2.1.1.2.2 MAC_ControlElement_BSR....172
D.2.1.1.2.3 MAC_ControlElement_ContentionResolutionId....173
D.2.1.1.2.4 MAC_ControlElement_TimingAdvance....173
D.2.1.1.2.5 MAC_ControlElement_PHR....173
D.2.1.1.2.6 MAC_ControlElement_SCellActivationDeactivation....174
D.2.1.1.2.7 MAC_ControlElement_DuplicationActivationDeactivation....174
D.2.1.1.2.8 MAC_ControlElement_SP_ResourceSetActivationDeactivation....174
D.2.1.1.2.9 MAC_ControlElement_CSI_TriggerStateSubselection....175
D.2.1.1.2.10 MAC_ControlElement_TCI_StatesActivationDeactivation....176
D.2.1.1.2.11 MAC_ControlElement_TCI_StateIndication....176
D.2.1.1.2.12 MAC_ControlElement_SP_CSI_ReportingActivationDeactivation....176
D.2.1.1.2.13 MAC_ControlElement_SP_SRS_ActivationDeactivation....177
D.2.1.1.2.14 MAC_ControlElement_PUCCH_SpatialRelationActivationDeactivation....178
D.2.1.1.2.15 MAC_ControlElement_ZP_ResourceSetActivationDeactivation....178
D.2.1.1.2.16 MAC_ControlElement_RecommendedBitrate....179
D.2.1.2 RLC_PDU....179
D.2.1.2.1 Common....180
D.2.1.2.2 TM_Data....180
D.2.1.2.3 UM_Data....180
D.2.1.2.4 AM_Data....181
D.2.1.2.5 AM_Status....183
D.2.2 DRB_Primitive_Definitions....185
D.2.2.1 DRB_Common....186
D.2.2.2 Downlink....187
D.2.2.3 Uplink....188
D.2.3 System_Interface....189
D.3 NR_ASP_SrbDefs....190
D.3.1 SRB_DATA_ASPs....190
D.3.2 Port_Definitions....191
D.4 NR_CommonDefs....192
D.4.1 Common_Types....192

D.4.2 RRC_Nested_Types....192
D.4.3 ASP_CommonPart....192
D.4.3.1 ASP_CommonPart_Definitions....193
D.4.3.1.1 Routing_Info....193
D.4.3.2 REQ_ASP_CommonPart....193
D.4.3.3 CNF_ASP_CommonPart....193
D.4.3.4 IND_ASP_CommonPart....194
D.5 IP_ASP_TypeDefs....194
D.5.1 IP_Common....194
D.5.2 IP_Config....195
D.5.3 IPsec_Config....197
D.5.4 IP_SocketHandling....199
D.5.4.1 Socket_Common....199
D.5.4.2 Socket_Datagram....200
D.5.4.3 TCP_Socket....201
D.5.4.4 UDP_Socket....207
D.5.4.5 ICMP_Socket....209
D.5.4.6 Socket_Primitives....211
D.5.5 System_Interface....212
D.6 NR_PDCP_TypeDefs....214
D.6.1 NR_PDCP_Config_Parameters....214
D.6.2 NR_PDCP_Configuration....215
D.6.3 NR_PDCP_DrbDefs....217
D.7 SDAP_TypeDefs....218
D.7.1 SDAP_Configuration....218
D.7.2 SDAP_DrbDefs....219
D.8 NR_ASP_VirtualNoiseDefs....221
D.9 CommonDefs....222
D.10 CommonAspDefs....228
D.10.1 Cell_Configuration_Common....228

D.10.2 MAC_Layer....228

D.10.3 System_Indications....230

D.10.4 ASP_CommonPart....230

D.10.4.1 ASP_CommonPart_Definitions....230

D.10.4.1.1 Routing_Info....230

D.10.4.1.2 Timing_Info....230

D.10.4.2 REQ_ASP_CommonPart....232

D.10.4.3 CNF_ASP_CommonPart....232

D.10.4.4 IND_ASP_CommonPart....232

D.11 References to TTCN-3....233

**Annex E (informative): Change history....234**

# Foreword

This Technical Specification has been produced by the 3rd Generation Partnership Project (3GPP).

The contents of the present document are subject to continuing work within the TSG and may change following formal TSG approval. Should the TSG modify the contents of the present document, it will be re-released by the TSG with an identifying change of release date and an increase in version number as follows:

Version x.y.z

where:

x the first digit:

1 presented to TSG for information;

2 presented to TSG for approval;

3 or greater indicates TSG approved document under change control.

y the second digit is incremented for all changes of substance, i.e. technical enhancements, corrections, updates, etc.

z the third digit is incremented when editorial only changes have been incorporated in the document.

The present document is part 3 of a multi-part deliverable covering the 5G System (5GS) User Equipment (UE) protocol conformance specification, as identified below:

- 3GPP TS 38.523-1 [8]: "5GS; User Equipment (UE) conformance specification; Part 1: Protocol".
- 3GPP TS 38.523-2 [9]: "5GS; User Equipment (UE) conformance specification; Part 2: Applicability of protocol test cases".
- **3GPP TS 38.523-3: "5GS; User Equipment (UE) conformance specification; Part 3: Protocol Test Suites"** (the present document).

# 1 Scope

The present document specifies the protocol and signalling conformance testing in TTCN-3 for the 3GPP UE connecting to the 5G System (5GS) via its radio interface(s).

The following TTCN test specification and design considerations can be found in the present document:

- the test system architecture;
- the overall test suite structure;
- the test models and ASP definitions;
- the test methods and usage of communication ports definitions;
- the test configurations;
- the design principles and assumptions;
- TTCN styles and conventions;
- the partial PIXIT proforma;
- the test suites.

The Test Suites designed in the document are based on the test cases specified in prose in 3GPP TS 38.523-1 [8]. The applicability of the individual test cases is specified in 3GPP TS 38.523-2 [9].

The present document is valid for TTCN development for 5GS UE conformance test according to 3GPP Releases starting from Release 15 up to the Release indicated on the cover page of the present document.

# 2 References

The following documents contain provisions which, through reference in this text, constitute provisions of the present document.

- References are either specific (identified by date of publication, edition number, version number, etc.) or non-specific.
- For a specific reference, subsequent revisions do not apply.
- For a non-specific reference, the latest version applies. In the case of a reference to a 3GPP document (including a GSM document), a non-specific reference implicitly refers to the latest version of that document *in the same Release as the present document*.

[1] 3GPP TR 21.905: "Vocabulary for 3GPP Specifications".

[2] ISO/IEC 9646-1: "Information technology - Open Systems Interconnection - Conformance testing methodology and framework - Part 1: General concepts".

[3] ISO/IEC 9646-7: "Information technology - Open systems interconnection - Conformance testing methodology and framework - Part 7: Implementation Conformance Statements".

[4] ETSI ES 201 873: "Methods for Testing and Specification (MTS); The Testing and Test Control Notation version 3".

[5] 3GPP TS 38.508-1: "5GS; User Equipment (UE) conformance specification; Part 1: Common test environment".

[6] 3GPP TS 38.508-2: "5GS; User Equipment (UE) conformance specification; Part 2: Common Implementation Conformance Statement (ICS) proforma".

[7] 3GPP TS 38.509: "5GS; Special conformance testing functions for User Equipment (UE)".

[8] 3GPP TS 38.523-1: "5GS; User Equipment (UE) conformance specification; Part 1: Protocol".

[9] 3GPP TS 38.523-2: "5GS; User Equipment (UE) conformance specification; Part 2: Applicability of protocol test cases".

[10] 3GPP TS 36.508: "Common test environments for User Equipment (UE) conformance testing".

[11] 3GPP TS 36.509: "Terminal logical test interface; Special conformance testing functions".

[12] 3GPP TS 36.523-3: "Evolved Universal Terrestrial Radio Access (E-UTRA) and Evolved Packet Core (EPC); User Equipment (UE) conformance specification; Part 3: Test suites".

[13] 3GPP TS 38.321: "NR; Medium Access Control (MAC) protocol specification".

[14] 3GPP TS 38.322: "NR; Radio Link Control (RLC) protocol specification".

[15] 3GPP TS 38.323: "NR; Packet Data Convergence Protocol (PDCP) specification".

[16] 3GPP TS 38.331: "NR; Radio Resource Control (RRC); Protocol specification".

[17] 3GPP TS 36.331: "Evolved Universal Terrestrial Radio Access (E-UTRA) Radio Resource Control (RRC); Protocol Specification".

[18] 3GPP TS 24.301: "Non-Access-Stratum (NAS) Protocol for Evolved Packet System (EPS); Stage 3".

[19] 3GPP TS 38.211: "NR; Physical channels and modulation".

[20] 3GPP TS 38.212: "NR; Multiplexing and channel coding".

[21] 3GPP TS 38.213: " NR; Physical layer procedures for control"

[22] 3GPP TS 38.214: "NR; Physical layer procedures for data".

[23] 3GPP TS 36.211: "Evolved Universal Terrestrial Radio Access (E-UTRA); Physical channels and modulation".

[24] 3GPP TS 38.304: "NR; User Equipment (UE) procedures in Idle mode and RRC Inactive state".

[25] 3GPP TS 33.501: "Security architecture and procedures for 5G system".

[26] 3GPP TS 24.501: "Non-Access-Stratum (NAS) Protocol for 5G System (5GS); Stage 3".

[27] RFC 5448: "Improved Extensible Authentication Protocol Method for 3rd Generation Authentication and Key Agreement (EAP-AKA’)"

# 3 Definitions, symbols and abbreviations

## 3.1 Definitions

For the purposes of the present document, the terms and definitions given in 3GPP TR 21.905 [1] and the following apply. A term defined in the present document takes precedence over the definition of the same term, if any, in 3GPP TR 21.905 [1].

In addition for the purposes of the present document, the following terms, definitions, symbols and abbreviations apply:

- such given in ISO/IEC 9646-1 [2] and ISO/IEC 9646-7 [3]

NOTE: Some terms and abbreviations defined in [2] and [3] are explicitly included below with small modification to reflect the terminology used in 3GPP.

**Implementation eXtra Information for Testing (IXIT)**: A statement made by a supplier or implementer of an UEUT which contains or references all of the information (in addition to that given in the ICS) related to the UEUT and its testing environment, which will enable the test laboratory to run an appropriate test suite against the UEUT.

**IXIT proforma:** A document, in the form of a questionnaire, which when completed for an UEUT becomes an IXIT.

**Protocol Implementation Conformance Statement (PICS):** An ICS for an implementation or system claimed to conform to a given protocol specification.

**Protocol Implementation eXtra Information for Testing (PIXIT):** An IXIT related to testing for conformance to a given protocol specification.

## 3.2 Symbols

No specific symbols have been identified so far.

## 3.3 Abbreviations

For the purposes of the present document, the abbreviations given in 3GPP TR 21.905 [1] and the following apply. An abbreviation defined in the present document takes precedence over the definition of the same abbreviation, if any, in 3GPP TR 21.905 [1].

| | |
|---|---|
| 5GC | 5G Core Network |
| ASP | Abstract Service Primitive |
| ATS | Abstract Test Suite |
| AWGN | Additive White Gaussian Noise |
| CA | Carrier Aggregation |
| CBRA | Contention Based Random Access |
| CCE | Control Channel Element |
| CFRA | Contention Free Random Access |
| CORESET | Control Resource Set |
| DAI | Downlink Assignment Index |
| DCI | Downlink Control Information |
| DL | Downlink |
| DL-SCH | Downlink Shared Channel |
| DMRS | Demodulation Reference Signal |
| EN-DC | E-UTRA-NR Dual Connectivity |
| EPC | Evolved Packet Core |

| | |
|---|---|
| FR1 | Frequency Range 1 |
| FR2 | Frequency Range 2 |
| HO | Handover |
| ICS | Implementation Conformance Statement |
| IUT | Implementation Under Test |
| IXIT | Implementation eXtra Information for Testing |
| LSB | Least Significant Bit |
| MCG | Master Cell Group |
| MN | Master Node |
| MSB | Most Significant Bit |
| NR | NR Radio Access |
| PDCCH | Physical Downlink Control Channel |
| PDSCH | Physical Downlink Shared Channel |
| PRACH | Physical Random Access Channel |
| PRB | Physical Resource Block |
| PSCell | Primary SCG Cell |
| PSS | Primary Synchronisation Signal |
| PUCCH | Physical Uplink Control Channel |
| PUSCH | Physical Uplink Shared Channel |
| RA | Random Access |
| RACH | Random Access Channel |
| RAR | Random Access Response |
| RAT | Radio Access Technology |
| RMSI | Remaining Minimum SI |
| SCG | Secondary Cell Group |
| SN | Secondary Node |
| SRS | Sounding Reference Signal |
| SS | System Simulator |
| SSB | Synchronization Signal and PBCH block |
| SSS | Secondary Synchronisation Signal |
| TC | Test Case |
| UL | Uplink |
| UL-SCH | Uplink Shared Channel |
| UT | Upper Tester |
| VNG | Virtual Noise Generator |

# 4 Test system architecture

## 4.1 General system architecture

The architecture specified in TS 36.523-3 [12] subclause 4.1.1 applies to the present document.

## 4.2 Component architecture

The architecture specified in TS 36.523-3 [12] subclause 4.1.2 applies to the present document, with NR RAT as another separate TTCN-3 parallel component.

# 5 Test models

## 5.1 EN-DC

### 5.1.1 Layer 3

#### 5.1.1.1 Single NR carrier

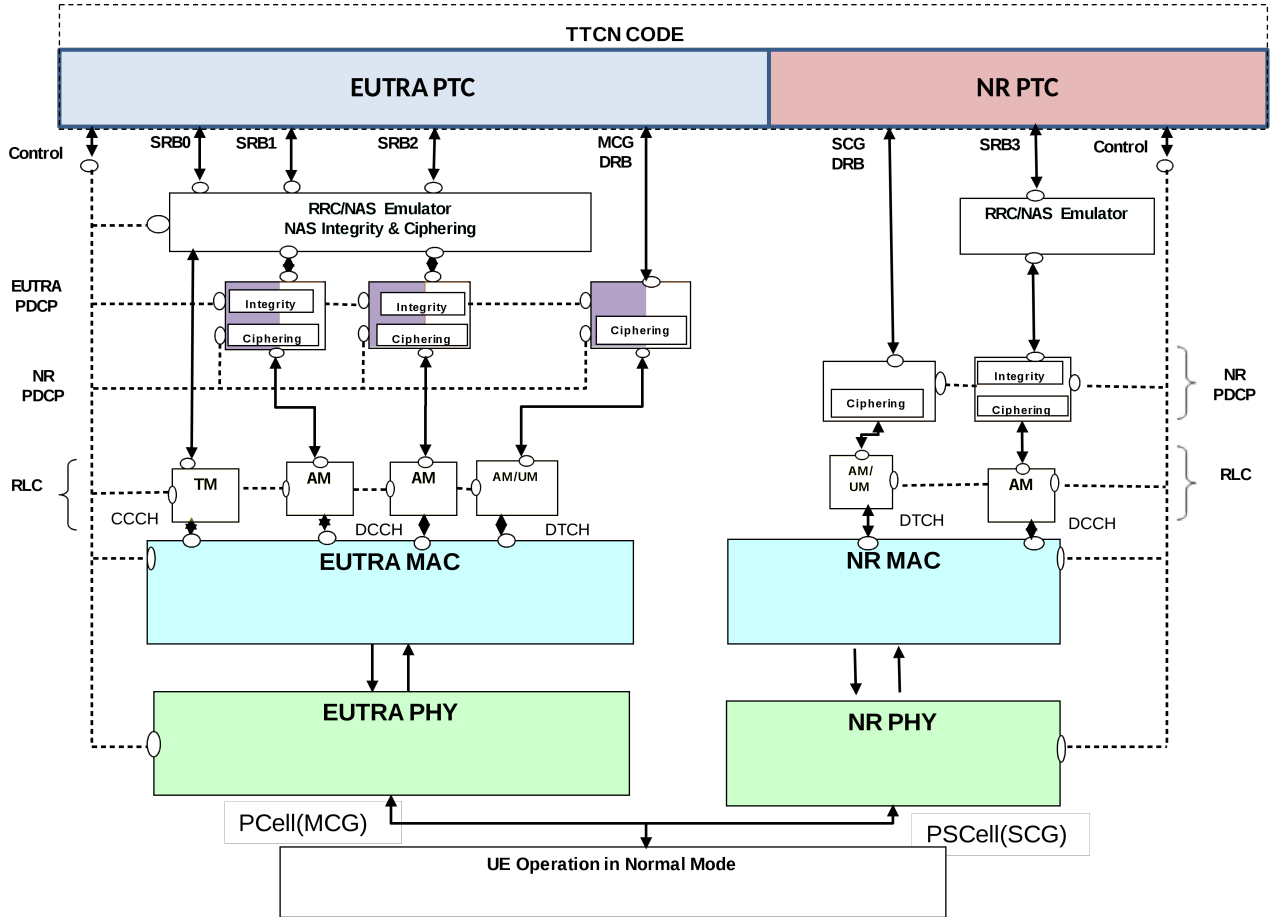


**Figure 5.1.1.1-1: Test model for EN-DC Layer3 testing (*MCG and SCG*)**

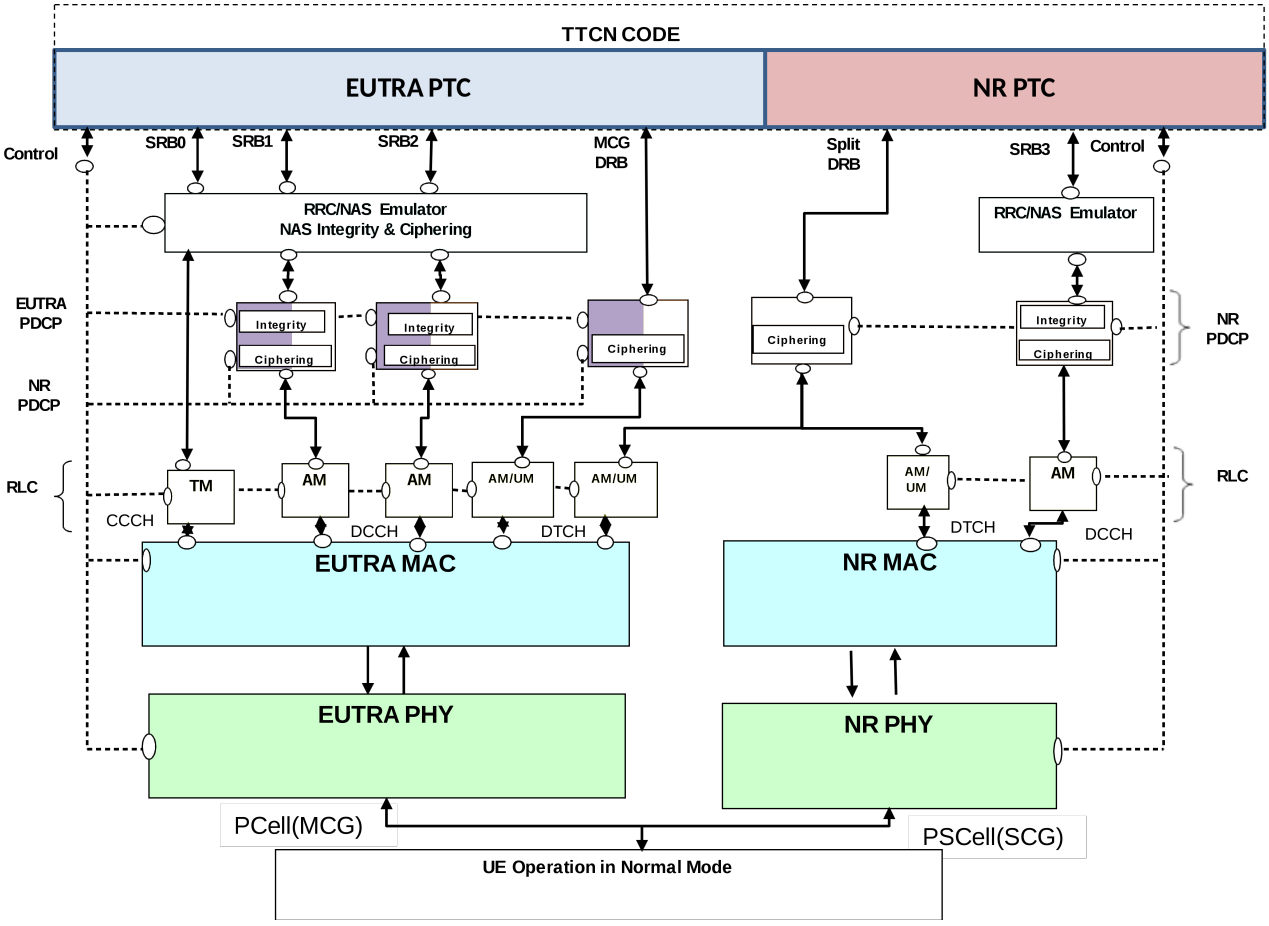


**Figure 5.1.1.1-2: Test model for EN-DC Layer3 testing (*MCG and split DRB*)**

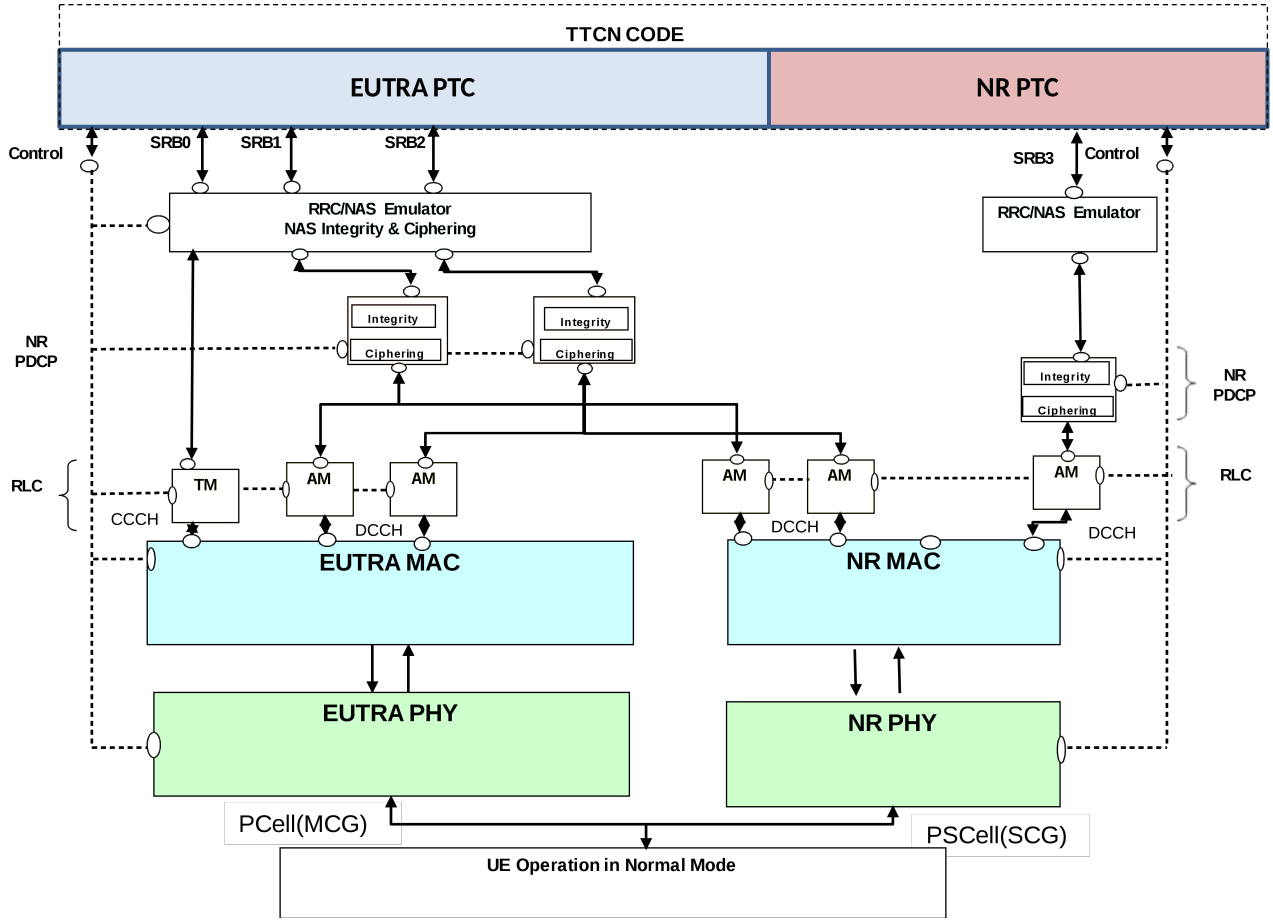


**Figure 5.1.1.1-3: Test model for EN-DC Layer3 testing (*Split SRB(s)*, DRBs removed for clarity)**

The UE is configured in normal mode. On the UE side Ciphering and Integrity (PDCP and NAS) are enabled and ROHC is not configured.

On the SS Side L1, MAC and RLC (EUTRA/NR) and PDCP (EUTRA/NR) are configured in normal way and shall perform all their functions. SRB0, 1 & 2 are configured only in EUTRA. For SRB0 the DL and UL port is above RLC. For SRB1 and SRB2 the port is above/below the EUTRA RRC and NAS emulator, which is implemented as a parallel test component. For DRB, the port is above PDCP. PDCP Ciphering/Integrity is enabled. NAS integrity/Ciphering is enabled.

NOTE: PDCP (EUTRA/NR) is always configured in the EUTRA PTC for SRB1 & 2.

The EUTRA RRC/NAS emulator for SRB1 and SRB2 shall provide the Ciphering and Integrity functionality for the EPS NAS messages. In UL direction, SS shall report RRC messages, still containing (where appropriate) the secure and encoded NAS message, to the RRC port. In DL, RRC and NAS messages with same timing information shall be embedded in one PDU after integrity and ciphering for NAS messages.

SRB3 is connected directly to the SRB port in the NR PTC/dummy NR RRC/NAS emulator.

The NR PDCP can be configured in either the EUTRA or NR PTC for one or more SRBs or DRBs. If NR PDCP is configured, the bearer can be split. In this case the PDCP will be fully configured on the cell upon which the bearer is terminated and the other PTC will be configured with a proxy PDCP. Data shall be sent/received only on the PTC upon which the bearer is terminated. The SS shall route data to/from either cell, via the routing information provided.

### 5.1.1.2 NR carrier aggregation

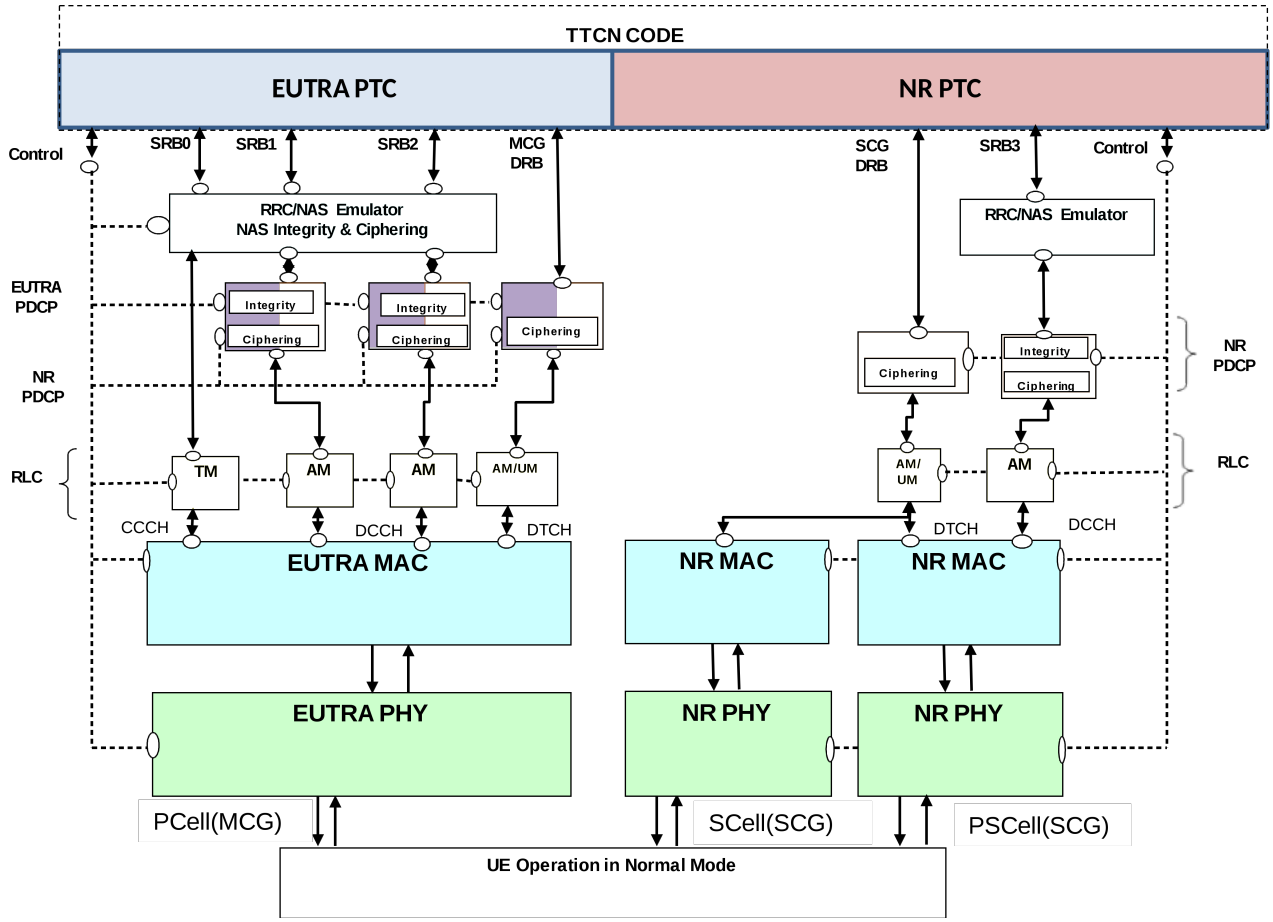


**Figure 5.1.1.2-1: Test model for EN-DC Layer3 CA testing**

The EN-DC Layer3 CA test model builds on top of the EN-DC Layer3 test model, with the differences specified hereafter.

On the SS NR side, in the SCG there is one PSCell and one SCell configured:

- PSCell: The associated SCell is linked to this PSCell,to enable the connection of the SCell MAC layer to the PSCell RLC/PDCP layers for DCCH/DTCH.
- SCell: Only PHY and MAC layers are configured, and MIB is broadcast.

The UL Scheduling Grant and DL Scheduling assignments are configured from TTCN over system control port. SS reports PUCCH scheduling information reception in PSCell over system indication port, if configured. In a similar way the reception of PRACH preambles in PSCell / SCell is reported by SS over the same port, if configured.

## 5.1.2 Layer 2

### 5.1.2.1 PDCP

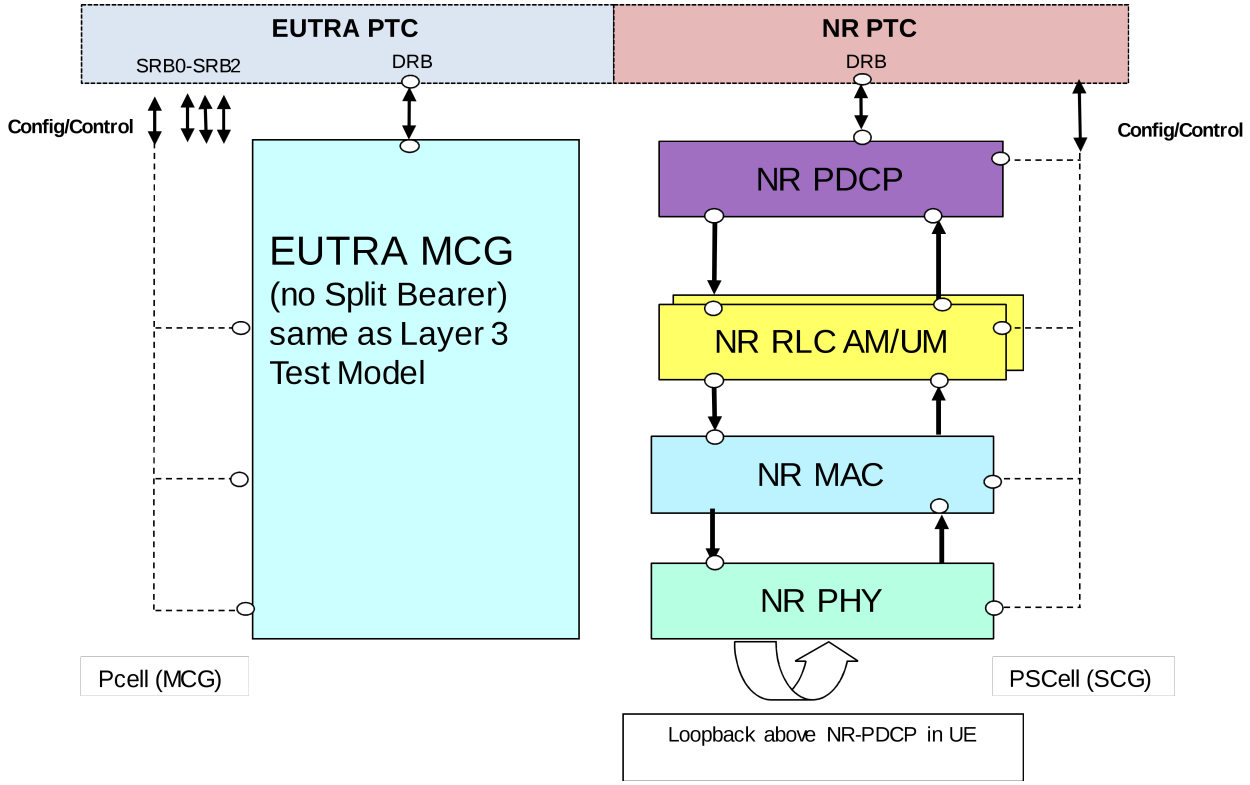


**Figure 5.1.2.1-1: Test model for EN-DC PDCP testing (*MCG and SCG*)**

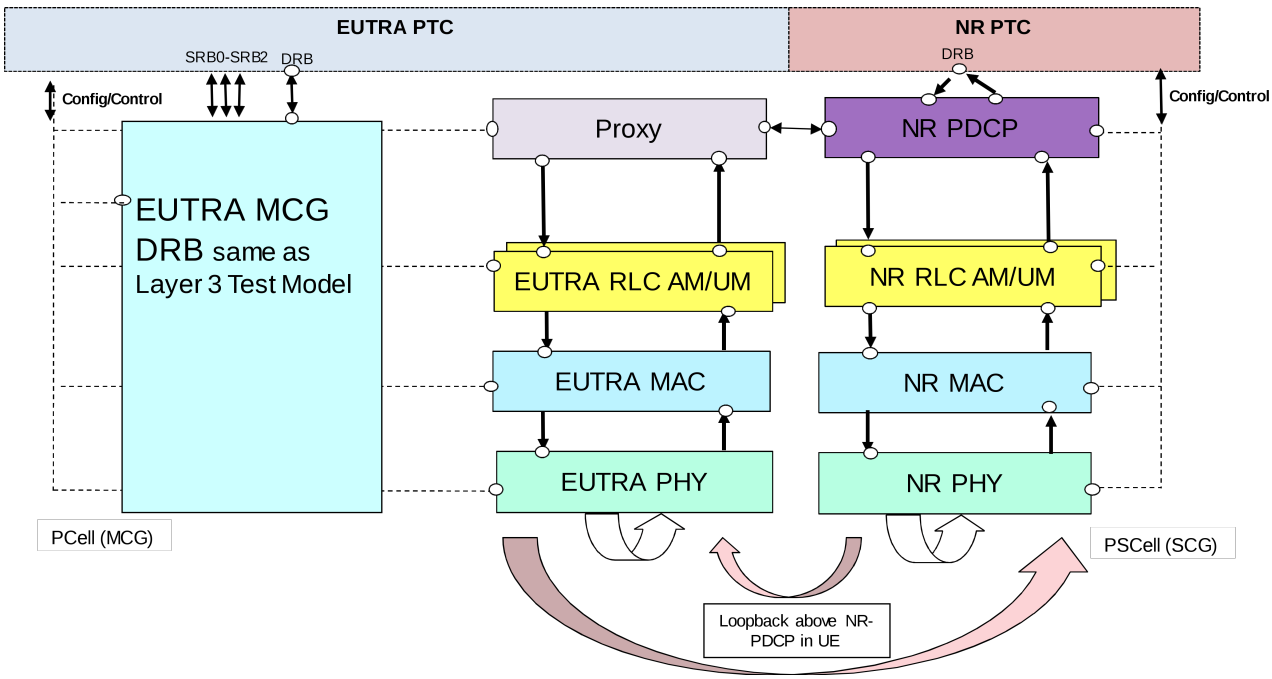


**Figure 5.1.2.1-2: Test model for EN-DC PDCP testing (*MCG and split DRB*)**

The UE is configured in Test Loop Mode, to loop back the user domain data above PDCP layer. On UE side Ciphering is enabled as null algorithm and ROHC is not configured.

Test Loop Mode can be active on SCG DRB as shown in Figure 5.1.2.1-1 or active split DRB as shown in Figure 5.1.2.1-2.

NOTE: Test loop Mode activation on MCG DRB with NR-PDCP is not considered in Figure 5.1.2.1-2.

On the SS NR, Layer 1, MAC and RLC are configured in the normal operation. The PDCP is configured in a special mode, where SS does not add any PCDP headers in DL and/or not remove any PDCP headers in UL directions respectively at DRB port on the NR PTC. The TTCN maintains sequence numbers and state variables for the PDCP layer.

On the SS Side the EUTRA MCG layer 1, MAC, RLC is configured in normal operation. They shall perform their functions. In case of split DRB, PDCP layer is configured as Proxy mode, TTCN shall configure EUTRA for EN-DC PDCP testing only when a Test Loop Mode is active on a split DRB.

The SS shall route DL PDCP PDUs from TTCN to PCell and/or PSCell and SS shall indicate that the UL PDCP PDU is received from PCell or PSCell.

Duplication function:

- DL is FFS.
- UL SS shall include routing information for each UL PDCP PDU.

The UL Scheduling Grant and DL Scheduling assignments are configured from TTCN over system control port. SS reports PUCCH scheduling information reception over system indication port, if configured.

### 5.1.2.2 RLC

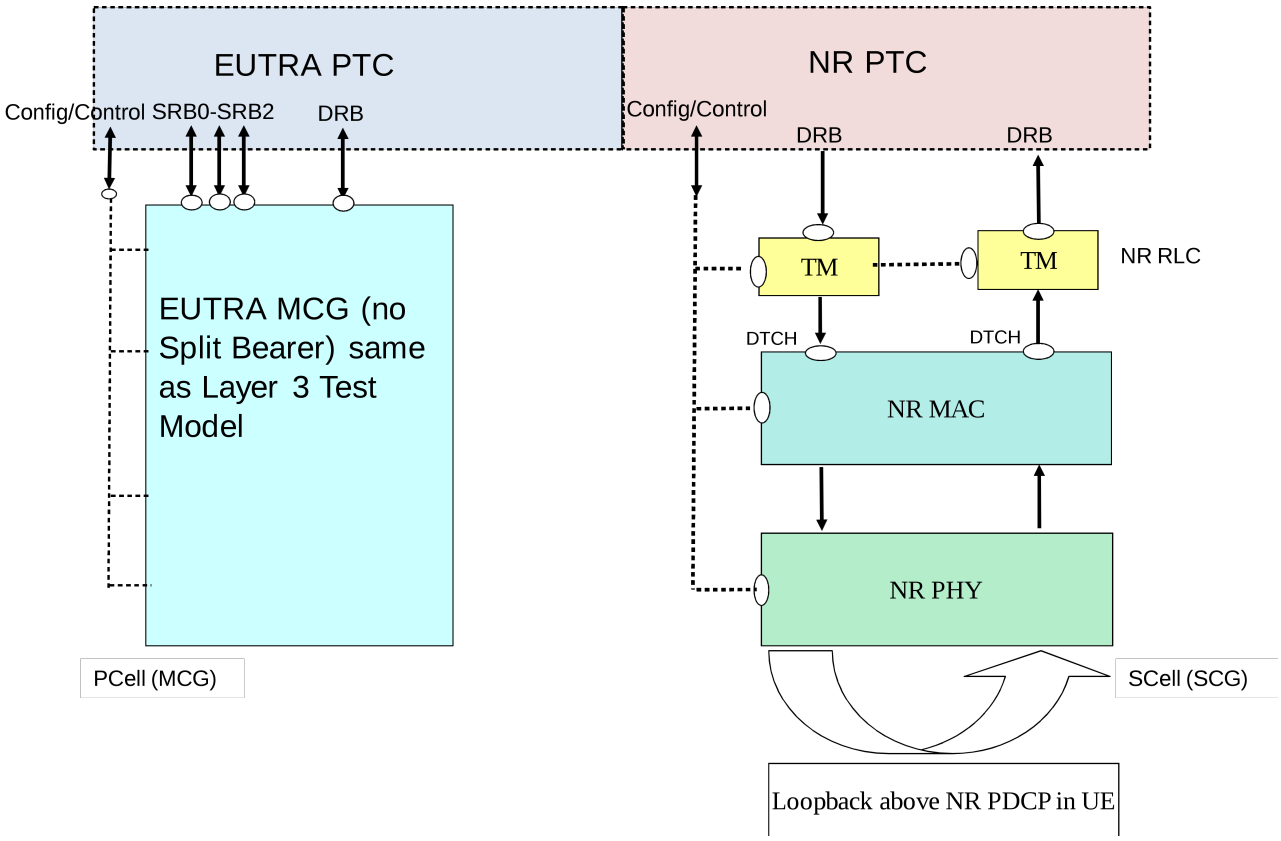


**Figure 5.1.2.2-1: Test model for EN-DC RLC AM/UM testing**

The PCell is an EUTRA Cell and PSCell is an NR cell on which testing happens. The UE is registered in EUTRA, using SRBs 0-2, and configured for EN-DC operation.

This model is suitable for testing both UM/AM mode of operation of DRBs on UE side.

The UE is configured in Test Loop Mode, to loop back the user domain data above PDCP layer. On UE side Ciphering is enabled (since mandatory) but with dummy ciphering algorithm, which is equivalent to not using ciphering. ROHC is not configured on UE Side.

On the SS Side, L1 and MAC are configured in the normal way. The RLC of the SCG DRBs is configured in transparent mode. Hence with this configuration PDUs out of SS RLC are same as the SDUs in it. There is no PDCP configured on SS NR PTC side. The ports are directly above RLC.

The PDUs, exchanged between TTCN and SS, shall be the final RLC PDUs consisting of RLC and PDCP headers. TTCN code shall take care in DL of building RLC headers and PDCP headers and in UL handle RLC and PDCP headers. TTCN code shall take care of maintaining sequence numbers and state variables for RLC and PDCP layers. If RLC on UE side is in AM mode, TTCN shall take care of generating polls in DL and responding with RLC control PDUs on reception of UL Poll.

### 5.1.2.3 MAC

#### 5.1.2.3.1 Single NR carrier

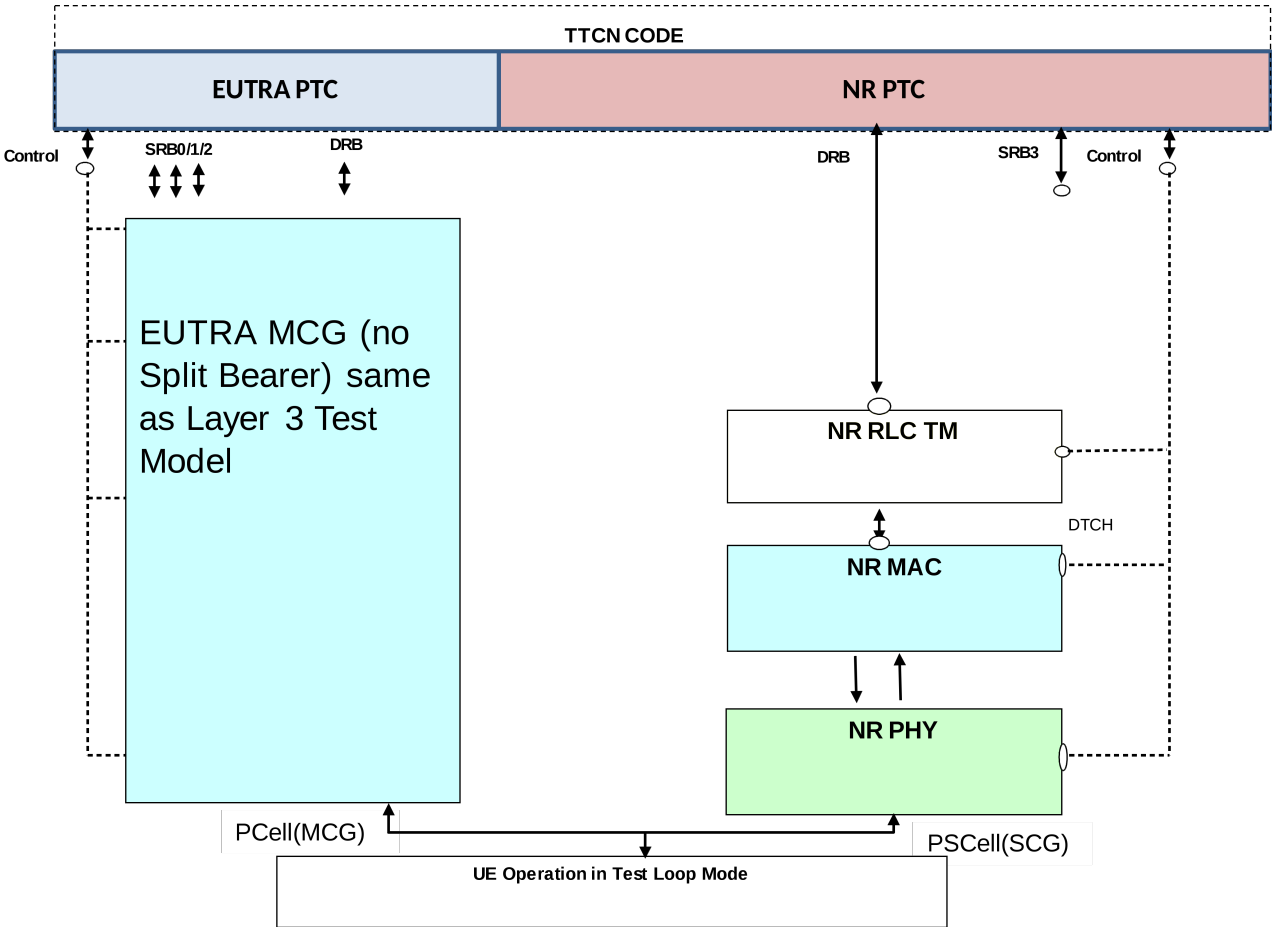


**Figure 5.1.2.3.1-1: Test model for EN-DC MAC testing**

The UE is configured in Test Loop Mode, to loop back the User Plane data above PDCP layer. On UE side Ciphering is enabled (since Mandatory) but with dummy ciphering algorithm, which is equivalent to not using ciphering. ROHC is not configured on UE Side.

On the SS Side the EUTRA MCG is configured as per the EN-DC Layer 3 test model in normal operation. The EN-DC MAC test model expects no split bearers to be configured.

On the SS NR, Layer 1 is configured in the normal way. NR MAC is configured in a special mode, where it does not add any MAC headers in DL and /or not remove any MAC headers in UL directions respectively at DRB port. In this case, the TTCN shall provide the final MAC PDU, including padding. Except for this, the NR MAC layer shall perform all its other functions. SRB3 if present is configured as in Layer 3 test model in normal operation.

On DRBs the NR RLC is configured in transparent mode. Hence with this configuration PDUs out of SS RLC are same as the SDUs in it. There is no NR PDCP configured on SS Side. The ports are directly above NR RLC.

There are two different test modes in which NR MAC header addition/removal can be configured:

1. DL/UL header-transparent mode: no header addition in DL and no header removal in UL.

2. DL only header-transparent mode: no header addition in DL; UL NR MAC is configured in normal mode to remove MAC header and de-multiplex the MAC SDUs according to the logical channel Ids.

If SS NR MAC is configured in DL/UL header-transparent mode, the PDUs, exchanged at the DRB port between TTCN and SS, shall be the final MAC PDUs consisting of MAC, RLC and PDCP headers. TTCN code shall take care in DL of building MAC header, RLC headers and PDCP headers and in UL handle MAC, RLC and PDCP headers. TTCN code shall take care of maintaining sequence numbers and state variables for RLC and PDCP layers. During testing of multiple DRBs at the UE side, it shall still be possible to configure only one DRB on SS side with configuration in the figure 5.1.2.3-1. Other DRBs will not be configured, to facilitate routing of UL MAC PDUs. Multiplexing/de-multiplexing of PDUs meant/from different DRBs shall be performed in TTCN. Since the MAC layer does not evaluate the MAC headers in UL it cannot distinguish between SRB and DRB data in UL. There shall be no SRB3 traffic while MAC is configured in this test mode. The SS MAC shall take care of automatic repetitions/retransmission in UL and DL, based on normal MAC HARQ behaviour.

If SS NR MAC is configured in DL only header-transparent mode, the UL PDUs exchanged at the DRB port between TTCN and SS shall be final RLC PDUs consisting of RLC and PDCP headers. SS shall route these PDUs based on logical channel IDs. In DL, TTCN sends fully encoded MAC PDUs at the DRB port (consisting of MAC, RLC and PDCP headers). In this case TTCN needs to take care of maintaining sequence numbers and state variables for RLC and PDCP layers. Furthermore, in UL and DL the SS MAC layer shall be capable of dealing with SRB3 data (i.e. it shall handle DL RLC PDUs coming from SRB3 RLC layer or de-multiplex UL RLC PDUs to SRB3) as in normal mode. The SS MAC shall take care of automatic repetitions/retransmissions in UL and DL, based on normal MAC HARQ behaviour. TTCN shall ensure that no DL MAC SDUs in normal mode and DL MAC PDUs in test mode are mixed for the same TTI.

The UL Scheduling Grant and DL Scheduling assignments are configured from TTCN over system control port. SS reports PUCCH scheduling information reception over system indication port, if configured. In a similar way the reception of PRACH preambles is reported by SS over the same port.

#### 5.1.2.3.2 NR carrier aggregation

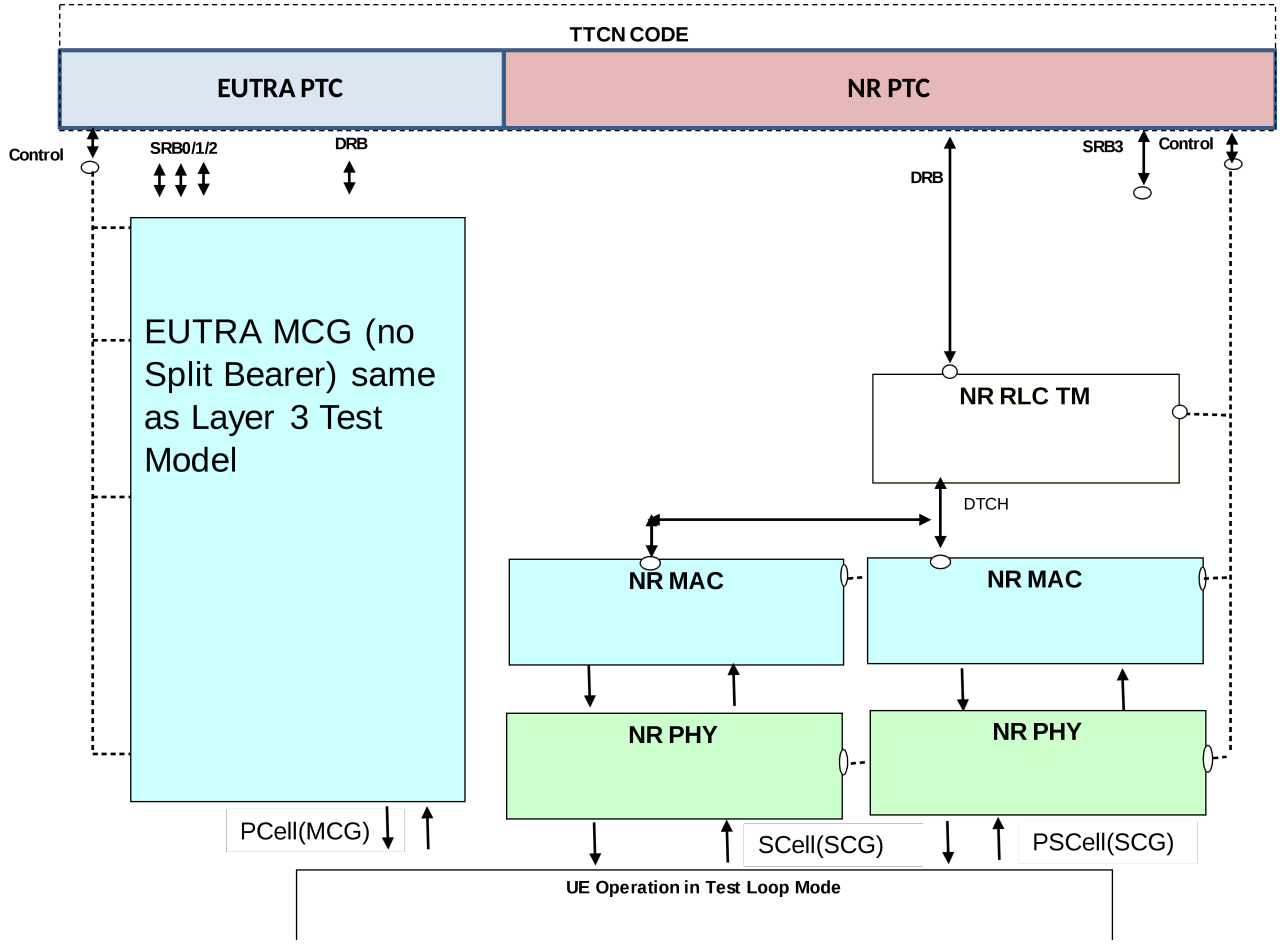


**Figure 5.1.2.3.2-1: Test model for EN-DC MAC CA testing**

The EN-DC MAC CA test model builds on top of the EN-DC MAC test model, with the differences specified hereafter.

On the SS NR side, in the SCG there is one PSCell and one SCell configured:

- PSCell only: On DRBs the NR RLC is configured in transparent mode. Hence with this configuration PDUs out of SS RLC are same as the SDUs in it. There is no NR PDCP configured in the SS. The ports are directly above NR RLC.

- PSCell / SCell: Layer 1 is configured in the normal way. NR MAC is configured in a special mode, where it does not add any MAC headers in DL and /or not remove any MAC headers in UL directions respectively at DRB port. In this case, the TTCN shall provide the final MAC PDU, including padding. Except for this, the MAC layer shall perform all of its other functions.

The UL Scheduling Grant and DL Scheduling assignments are configured from TTCN over system control port. SS reports PUCCH scheduling information reception in PSCell over system indication port, if configured. In a similar way the reception of PRACH preambles in PSCell / SCell is reported by SS over the same port, if configured.

# 5.2 NR/5GC

## 5.2.1 Layer 3

### 5.2.1.1 Single NR carrier

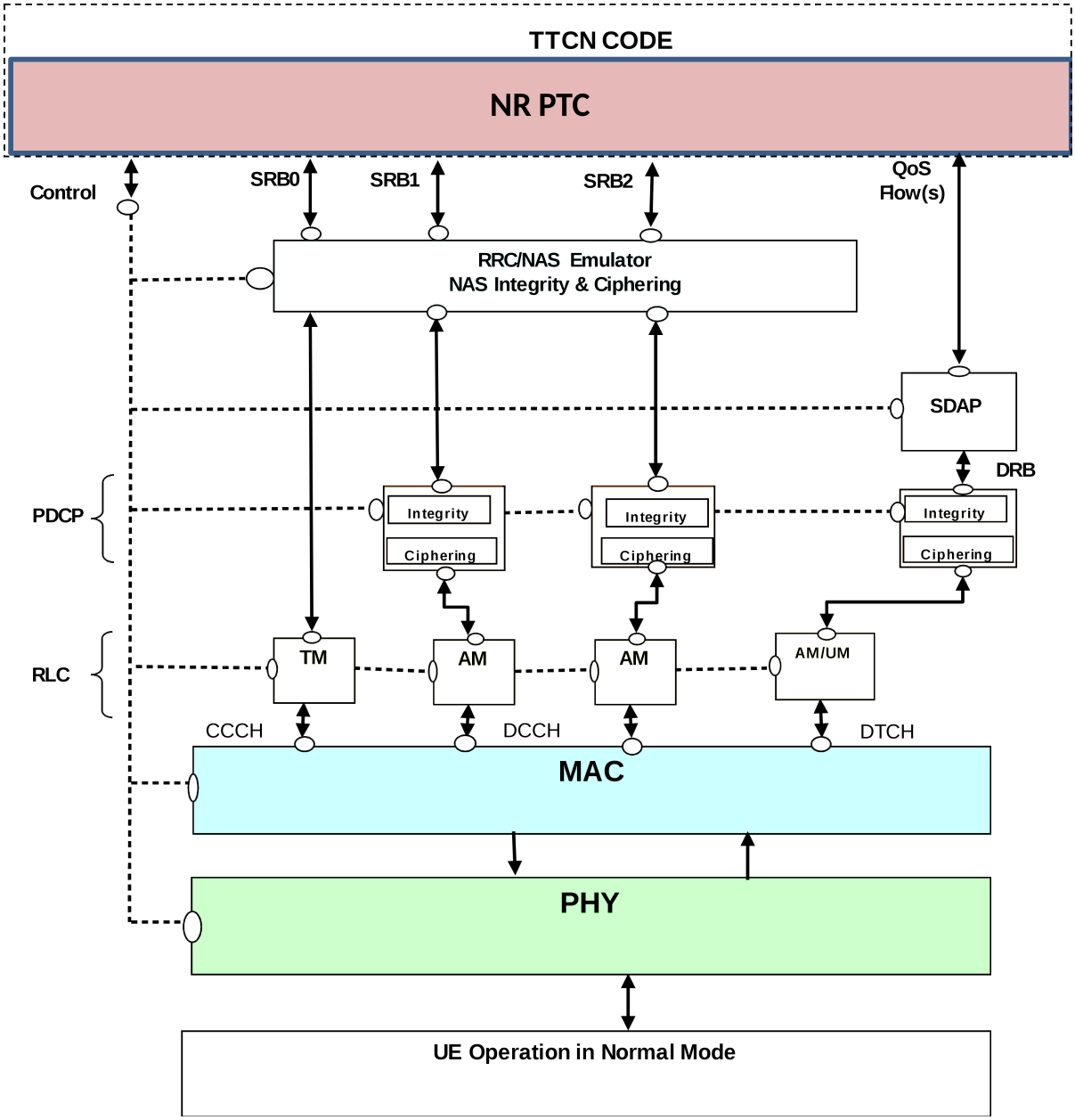


**Figure 5.2.1.1-1: Test model for NR/5GC Layer3 testing**

The UE is configured in normal mode. On the UE side Ciphering and Integrity (PDCP and NAS) are enabled and ROHC is not configured.

On the SS Side L1, MAC, RLC, PDCP and SDAP are configured in the normal way and shall perform all their functions. For SRB0 the DL and UL port is above RLC. For SRB1 and SRB2 the port is above/below the NR RRC and

NAS emulator, which is implemented as a parallel test component. For DRB, the port is above SDAP. PDCP Ciphering/Integrity is enabled. NAS integrity/Ciphering is enabled.

The RRC/NAS emulator for SRB1 and SRB2 shall provide the Ciphering and Integrity functionality for the 5GC NAS messages. In UL, the SS shall report RRC messages, still containing (where appropriate) the secure and encoded NAS message, to the RRC port. In DL, RRC and NAS messages with same timing information shall be embedded in one PDU after integrity and ciphering of the NAS messages.

### 5.2.1.2 NR carrier aggregation

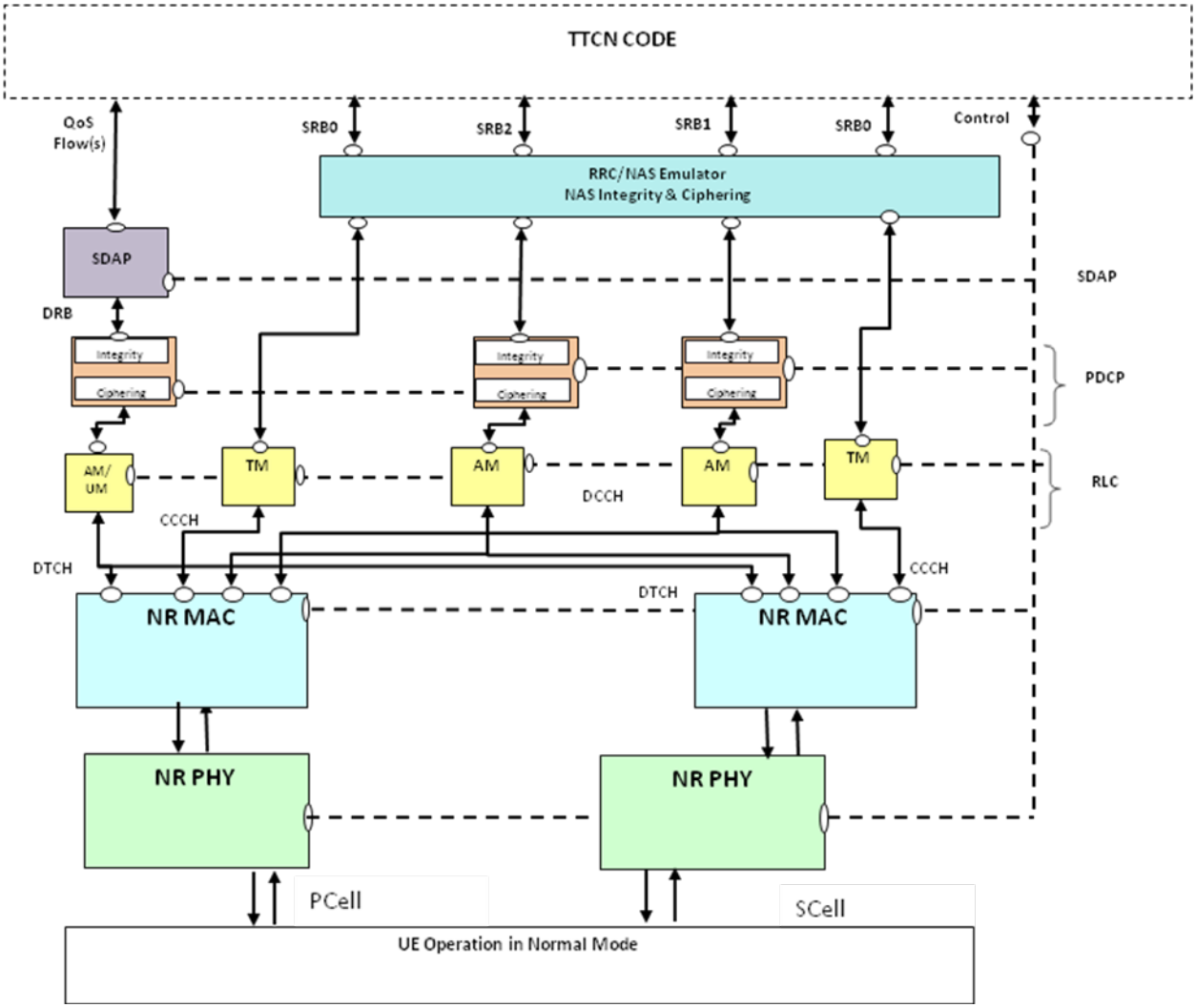


**Figure 5.2.1.2-1: Test model for NR/5GC Layer3 CA testing**

The NR/5GC Layer3 CA test model builds on top of the NR/5GC Layer3 test model, with the differences specified hereafter.

In the SS side, there is one PCell and one SCell configured:

- PCell: The associated SCell is linked to this PCell to enable the connection of the SCell MAC layer to the PCell RLC/PDCP layers for DCCH/DTCH.
- SCell: PHY and MAC layers are configured in normal way. RLC layer is configured only for BCCH/PCCH/CCCH.

The UL Scheduling Grant and DL Scheduling assignments are configured from TTCN over system control port. The SS reports PUCCH scheduling information reception in PCell over system indication port, if configured. In a similar way the reception of PRACH preambles in PCell / SCell is reported by SS over the same port, if configured.

### 5.2.1.3 NR/E-UTRA Inter-RAT

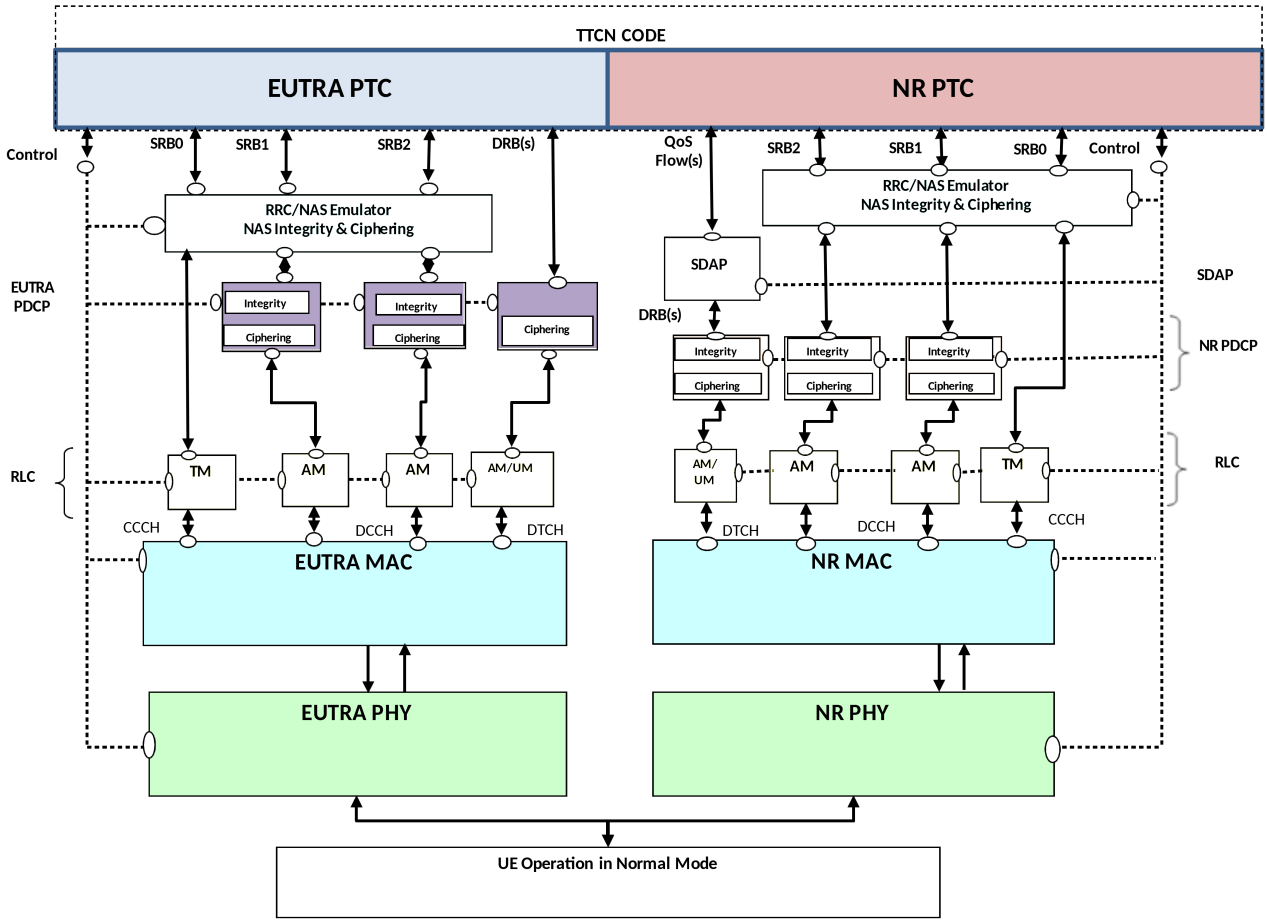


**Figure 5.2.1.3-1: Test model for NR/E-UTRA Inter-RAT testing**

This test model is only relevant for NR/5GC to/from E-UTRA/EPC inter-RAT and is not applicable to E-UTRA/5GC. The model consists of a dual protocol stack: one for NR and one for E-UTRA. The TTCN implementation for NR and E-UTRA functionalities will be in separate Parallel Test Components.

The SS NR part is the same as the model defined in subclause 5.2.1.1 for NR/5GC L3 testing.

The SS E-UTRA part is the same as the model defined in 36.523-3 [12] clause 4.2.2 for RRC testing.

The UE is configured in normal mode. Ciphering/Integrity (PDCP and NAS) are enabled and ROHC is not configured.

### 5.2.1.4 NR supplementary uplink

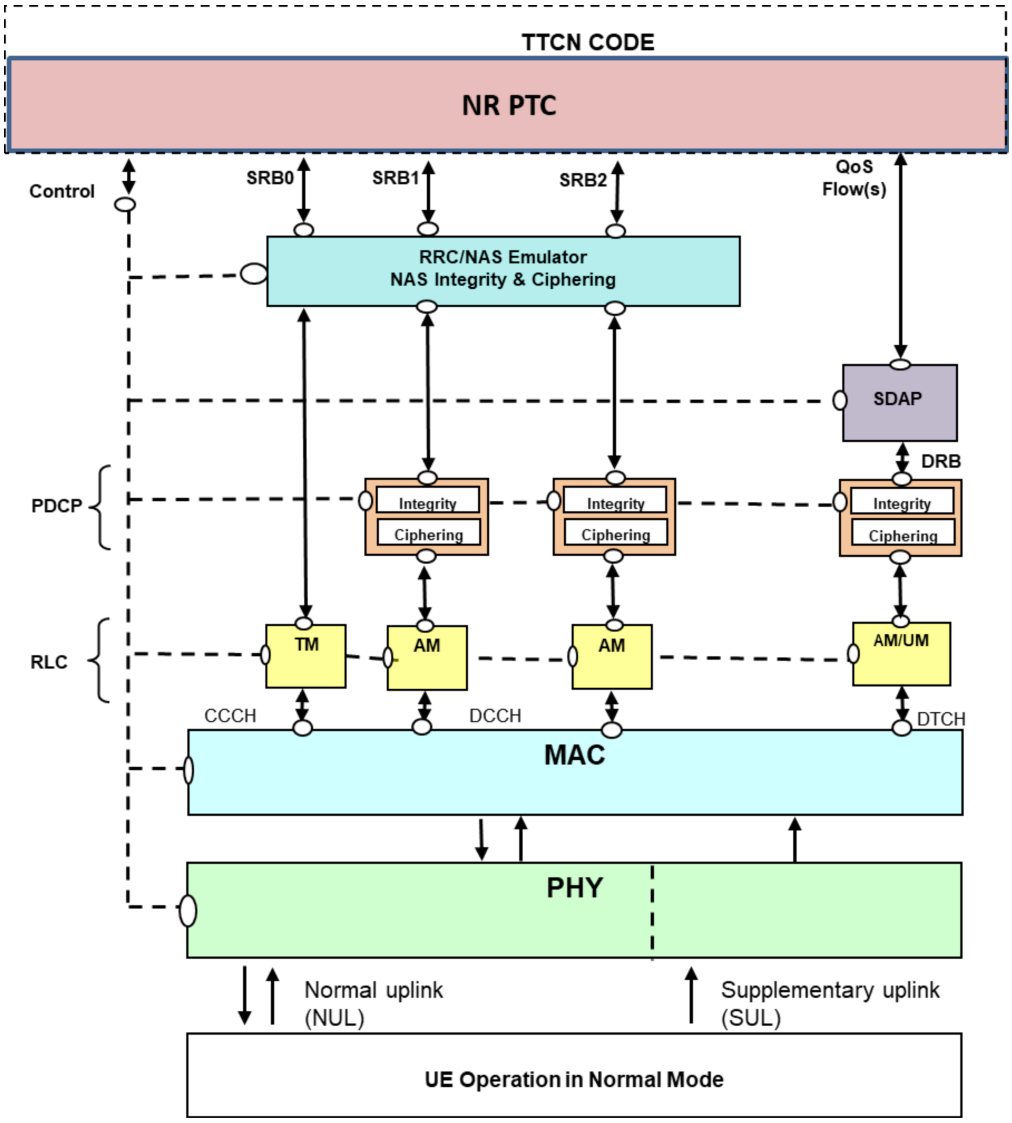


**Figure 5.2.1.4-1: Test model for NR/5GC Layer3 supplementary uplink testing**

The NR/5GC Layer3 supplementary uplink test model builds on top of the NR/5GC Layer3 test model, with the differences specified hereafter.

In the SS side:

- The NR cell is configured with one uplink (NUL) carrier and one supplementary uplink (SUL) carrier. See NOTE 1.
- The SUL routing information shall be provided by SS in the common part of the indication ASP when the data is received from the SUL carrier.
- The SS shall monitor both NUL carrier and SUL carrier for PRACH reception. TTCN checks whether RA Msg1 and RA Msg3 are received from NUL or SUL carrier using the SUL routing information in the indication ASP.
- The UL scheduling Grants are configured from TTCN over the system control port for PUSCH transmission on the NUL carrier or the SUL carrier.

NOTE 1: While TS 38.508-1 [5] defines an SUL carrier as a pseudo-standalone NR Cell 33, in the present test model, the SUL carrier is an additional carrier to the NR Cell operating on the NUL carrier. So NR Cell of identity 33 is not used in TTCN.

### 5.2.1.5 NR dual connectivity

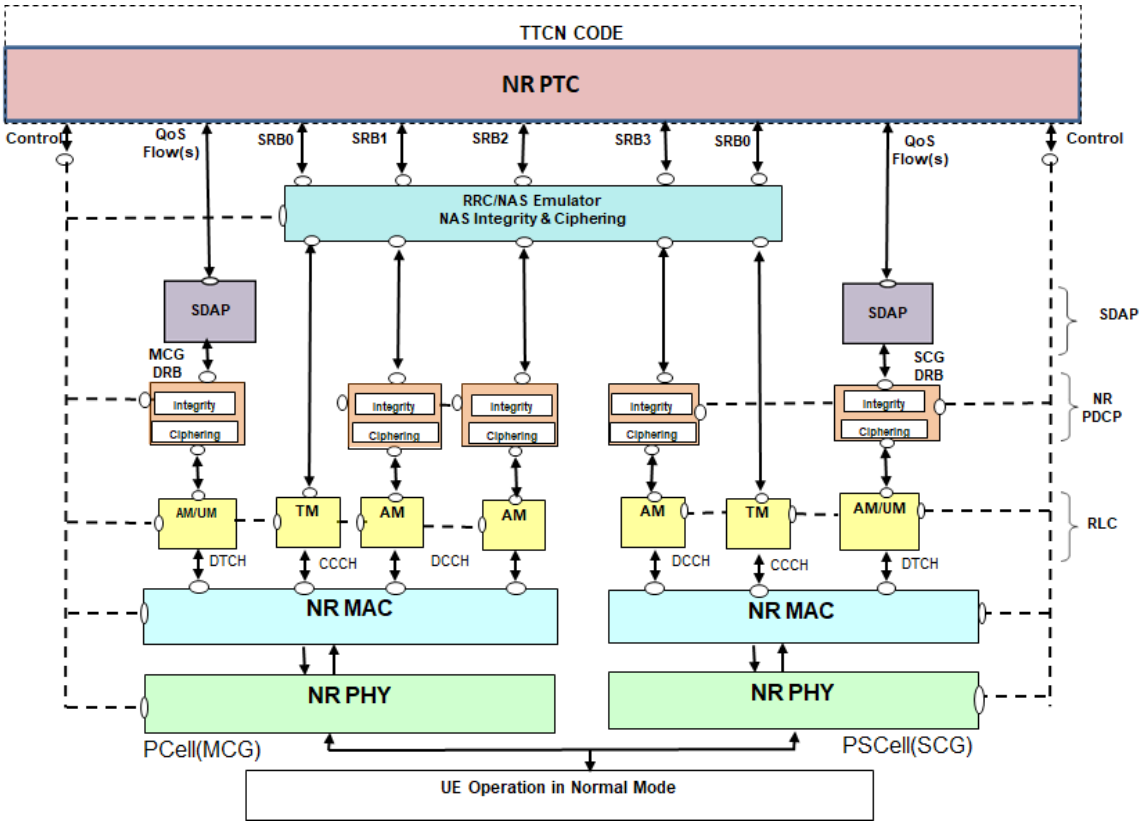


**Figure 5.2.1.5-1: Test model for NR/5GC NR-DC Layer3: MCG and SCG**

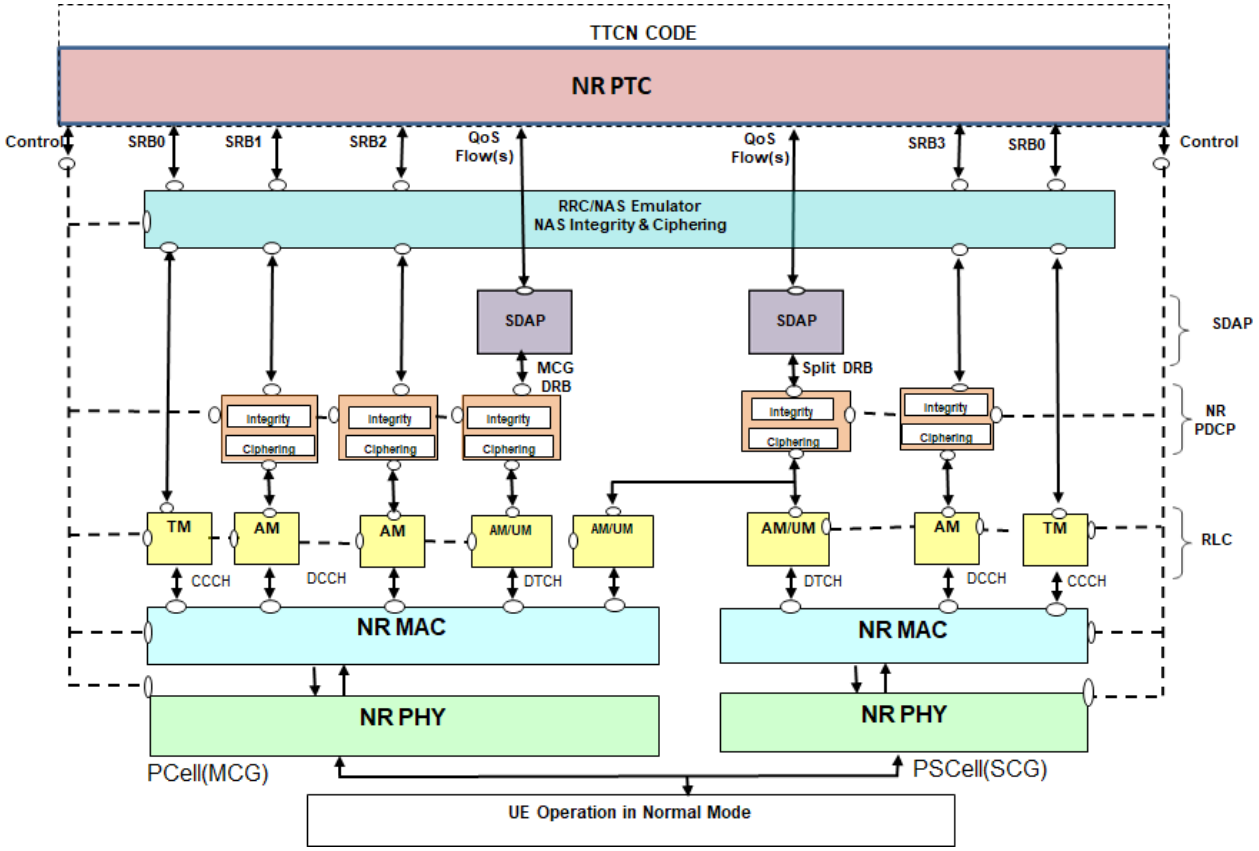


**Figure 5.2.1.5-2: Test model for NR/5GC NR-DC Layer3 testing: MCG and split DRB**

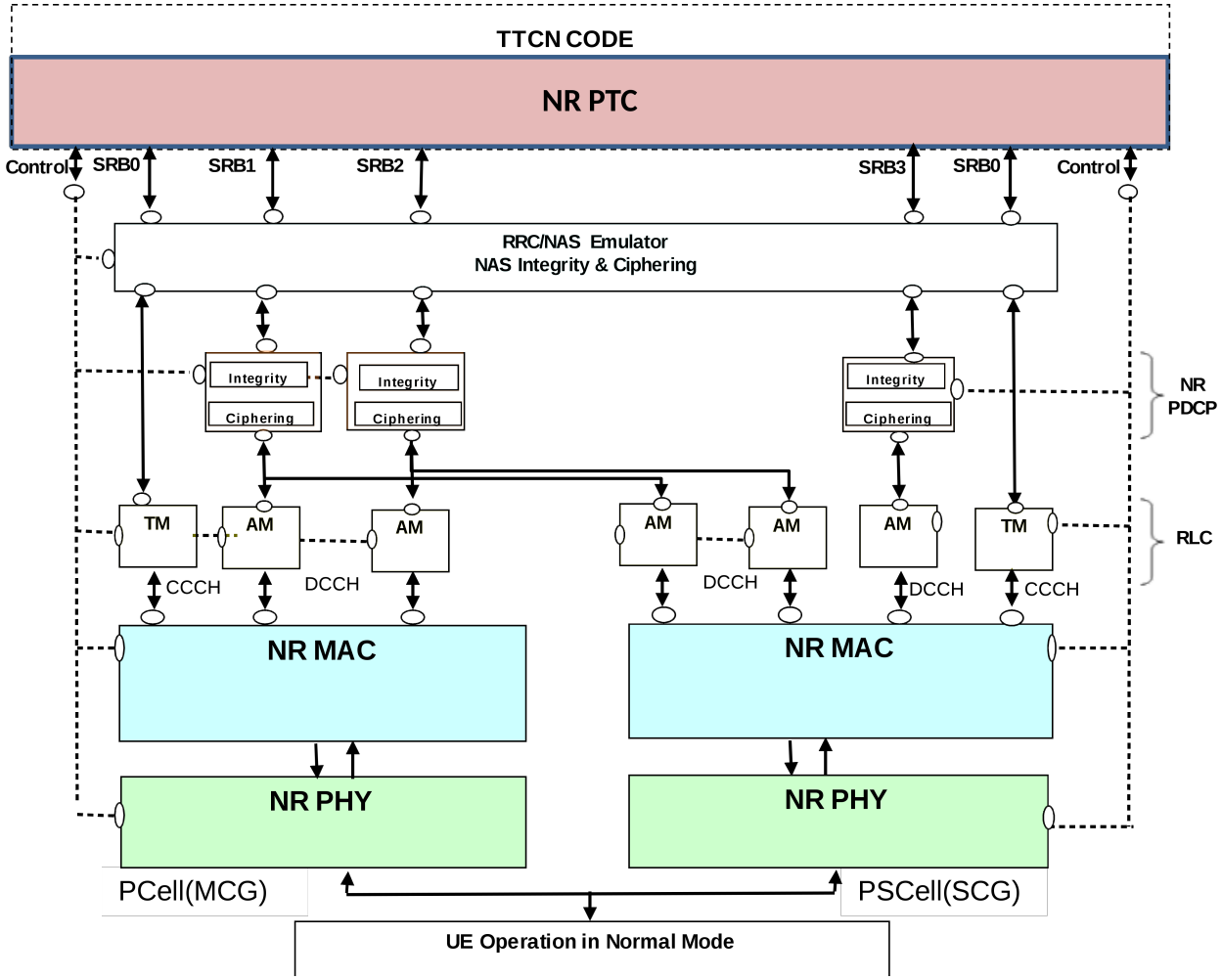


**Figure 5.2.1.5-3: Test model for NR/5GC NR-DC Layer3 testing: Split SRB(s), DRBs removed for clarity**

The NR/5GC Layer3 NR-DC test model builds on top of the NR/5GC Layer3 test model, with the differences specified hereafter:

- SRB1 and SRB2 are configured only in the PCell,
- SRB3 can be configured in the PSCell,
- The NR PDCP can be configured in split for one or more SRBs or DRBs. In this case NR PDCP is configured in one cell and a proxy PDCP will be configured in the other cell. The SS shall route data to/from either cell, via the routing information provided.

## 5.2.2 Layer 2

### 5.2.2.1 SDAP

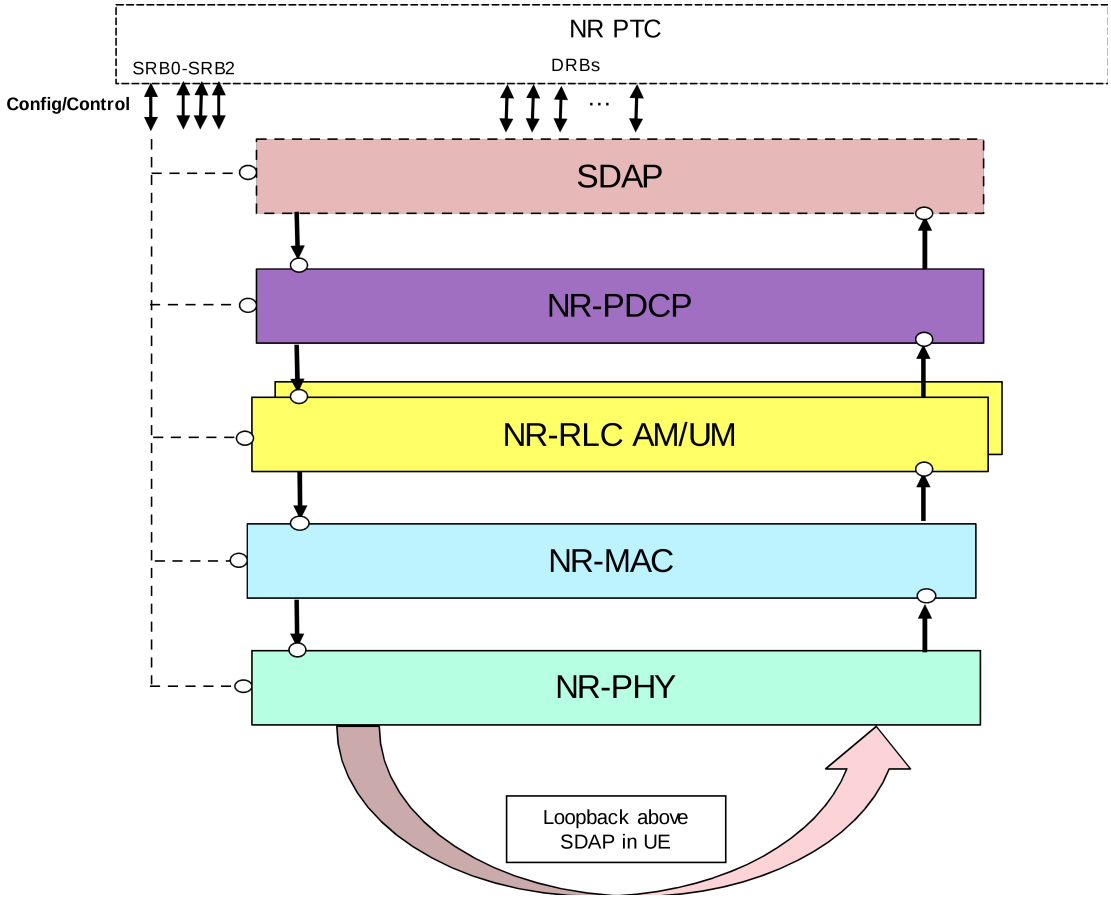


**Figure 5.2.2.1-1: Test model for NR/5GC SDAP testing**

The UE is configured in Test Loop Mode, to loop back the user domain data above SDAP layer. On UE side Ciphering is enabled with null algorithm and ROHC is not configured.

On the SS, Layer 1, MAC, RLC and PDCP are configured in the normal operation. The SDAP is configured in a special mode, where SS does not add any SDAP header in DL and does not remove any SDAP header in UL at the DRB port on the NR PTC. The TTCN code will take care of the SDAP header handling and of the QoS flow to DRB mapping, i.e. the SS will route DL SDAP PDUs from TTCN to the corresponding DRB.

The UL Scheduling Grant and DL Scheduling assignments are configured from TTCN over system control port.

### 5.2.2.2 PDCP

#### 5.2.2.2.1 Single NR carrier

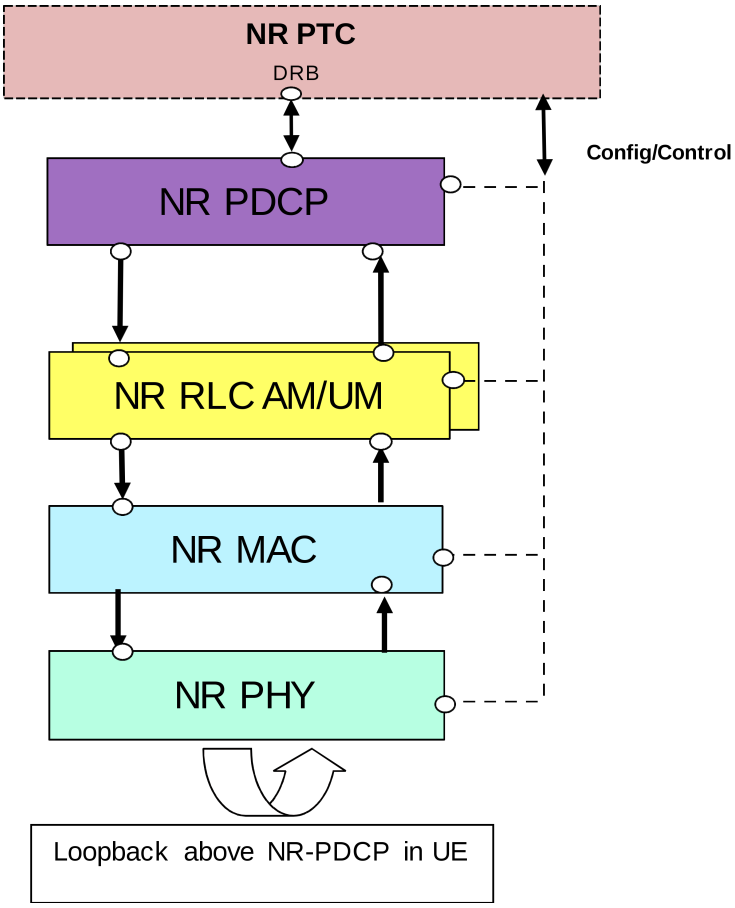


**Figure 5.2.2.2.1-1: Test model for NR/5GC PDCP testing**

The UE is configured in Test Loop Mode, to loop back the user domain data above PDCP layer. On UE side Ciphering is enabled as null algorithm and ROHC is not configured.

On the SS NR, Layer 1, MAC and RLC is configured in the normal operation.

The PDCP is configured in a special mode, where SS does not add any PDCP headers in DL and/or not remove any PDCP headers in UL directions respectively at DRB port on the NR PTC. The TTCN maintains sequence numbers and state variables for the PDCP layer.

The UL Scheduling Grant and DL Scheduling assignments are configured from TTCN over system control port. SS reports PUCCH scheduling information reception over system indication port, if configured.

#### 5.2.2.2.2 NR dual connectivity

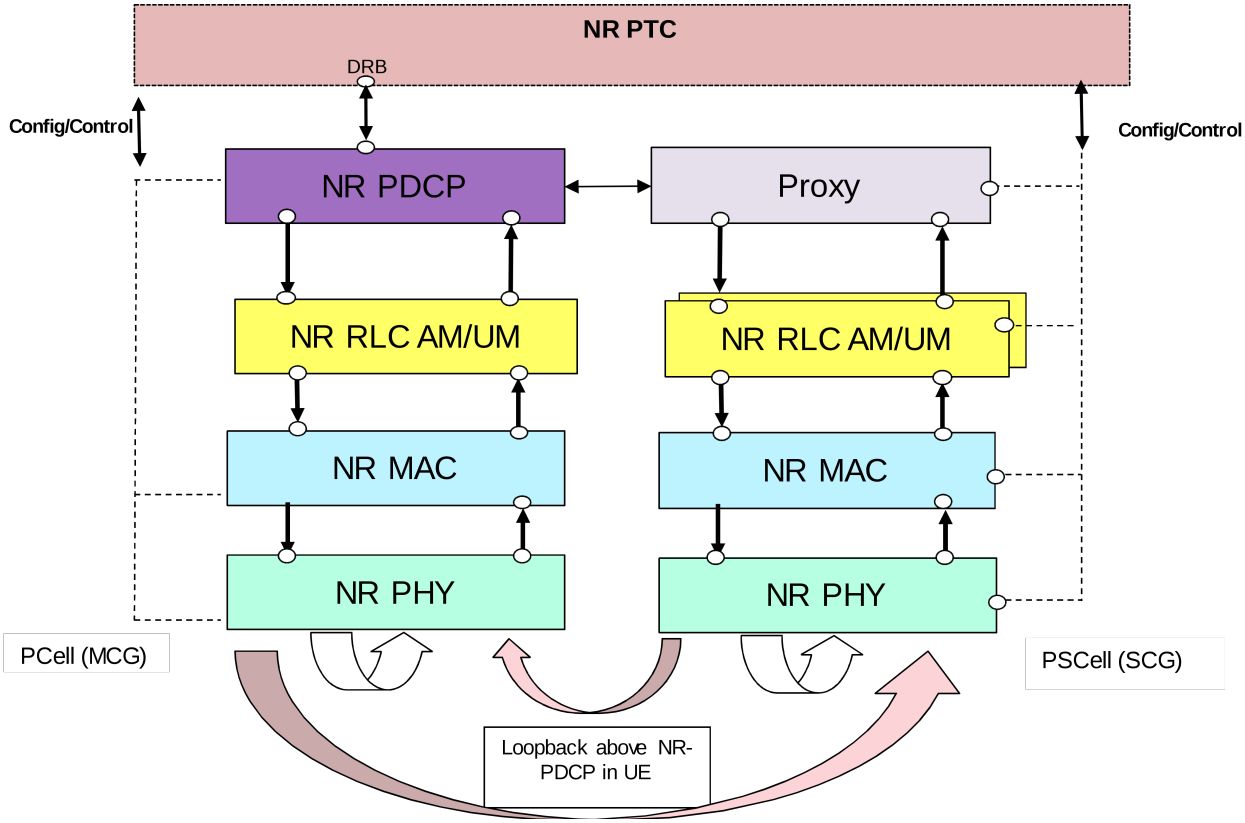


**Figure 5.2.2.2.2-1: Test model for NR/5GC NR-DC PDCP testing (*split DRB*)**

The UE is configured in Test Loop Mode, to loop back the user domain data above PDCP layer.

On UE side Ciphering is enabled as null algorithm and ROHC is not configured.

The SS configures in the First Cell, Layer 1, MAC and RLC in the normal operation. The NR PDCP is configured in a special mode, where SS does not add any PDCP headers in DL and/or not remove any PDCP headers in UL directions respectively at DRB port on the NR PTC. The TTCN maintains sequence numbers and state variables for the PDCP layer.

The SS configures in the Second Cell, Layer 1, MAC and RLC in the normal operation. The NR PDCP is configured as Proxy. DRB data will be sent between the NR PDCP Proxy and the NR PDCP.

Note that the First Cell refers to MCG PCell and the Second Cell to SCG PSCell, or viceversa.

The UL Scheduling Grant and DL Scheduling assignments are configured from TTCN over system control port. SS reports PUCCH scheduling information reception over system indication port, if configured.

### 5.2.2.3 RLC

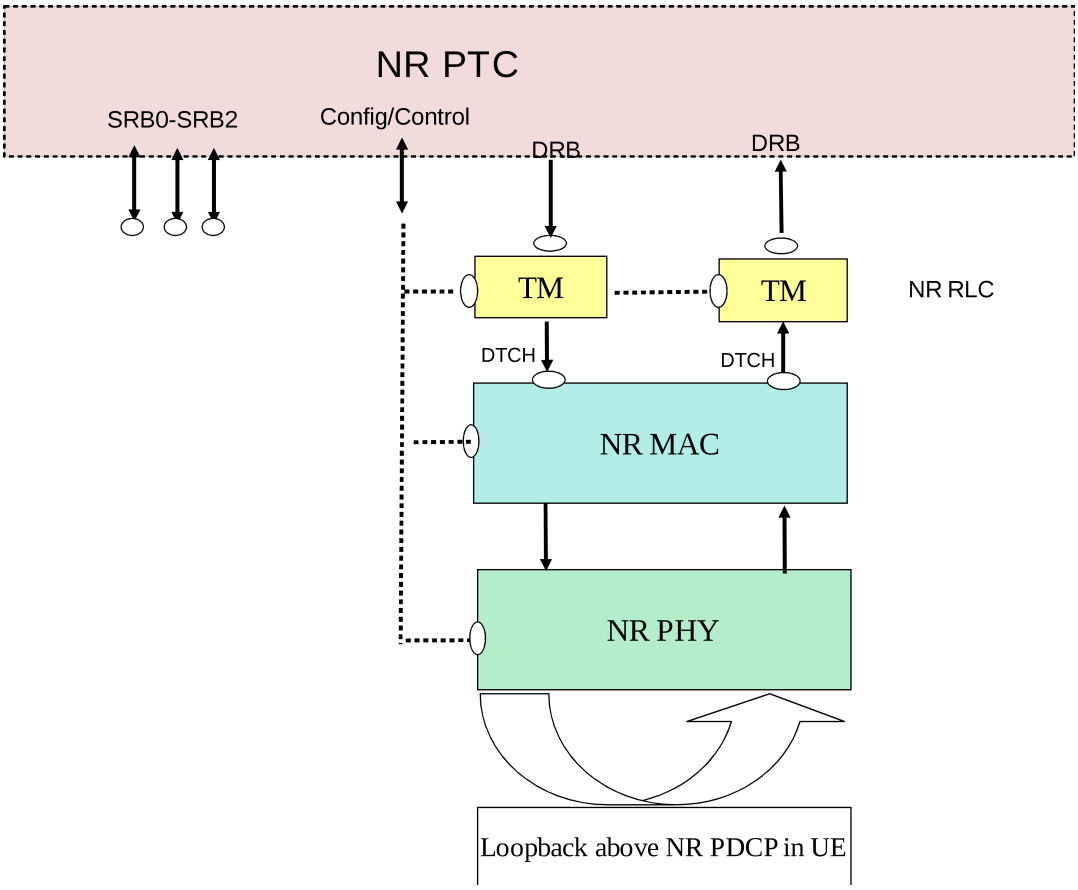


**Figure 5.2.2.3-1: Test model for NR/5GC RLC testing**

The UE is registered in NR, using SRBs 0-2, and configured for NR/5GC operation.

This model is suitable for testing both UM/AM mode of operation of DRBs on UE side.

The UE is configured in Test Loop Mode, to loop back the user domain data above PDCP layer. On UE side Ciphering is enabled (since mandatory) but with dummy ciphering algorithm, which is equivalent to not using ciphering. ROHC is not configured on UE Side.

On the SS Side, L1 and MAC are configured in the normal way. The RLC of the DRBs is configured in transparent mode. Hence with this configuration PDUs out of SS RLC are same as the SDUs in it. There is no PDCP configured on SS side. The ports are directly above RLC.

The PDUs, exchanged between TTCN and SS, shall be the final RLC PDUs consisting of RLC and PDCP headers. TTCN code shall take care in DL of building RLC headers and PDCP headers and in UL handle RLC and PDCP headers. TTCN code shall take care of maintaining sequence numbers and state variables for RLC and PDCP layers. If RLC on UE side is in AM mode, TTCN shall take care of generating polls in DL and responding with RLC control PDUs on reception of UL Poll.

### 5.2.2.4 MAC

#### 5.2.2.4.1 Single NR carrier

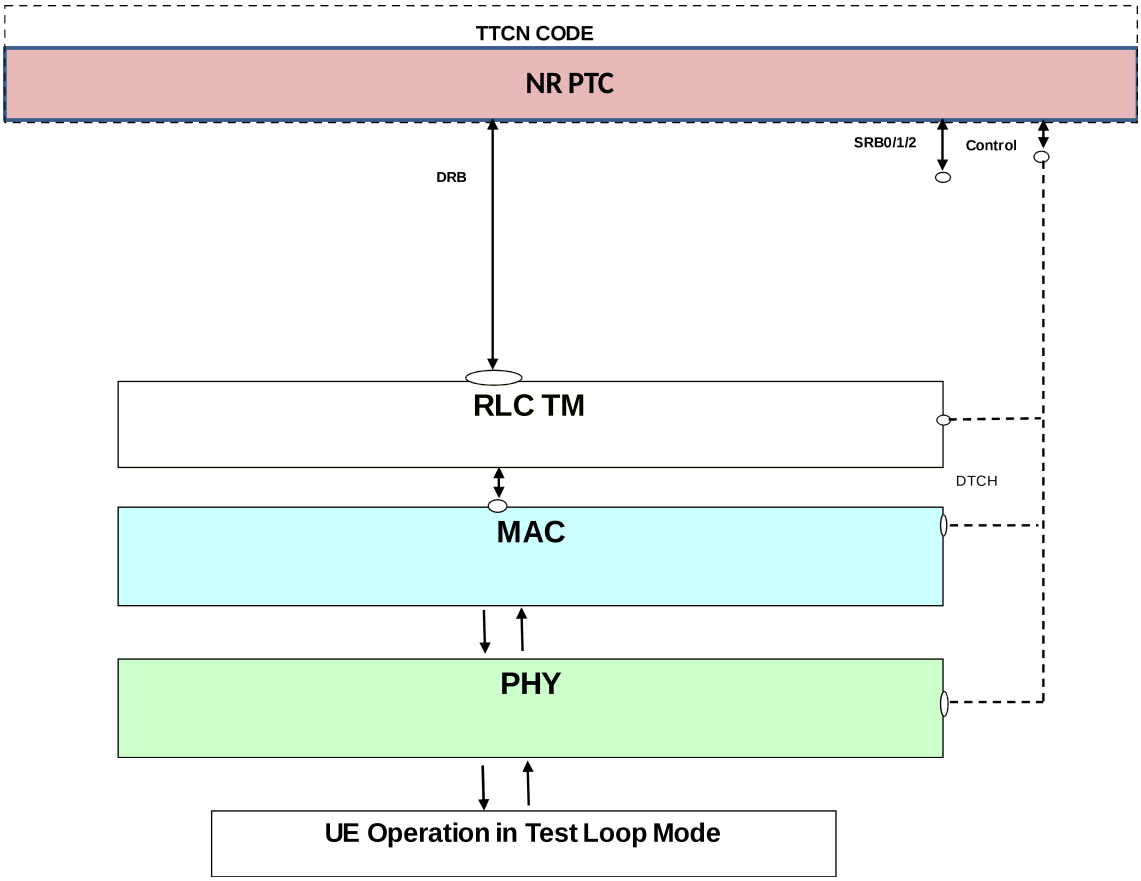


**Figure 5.2.2.4.1-1: Test model for NR/5GC MAC testing**

The UE is configured in Test Loop Mode A, to loop back the User Plane data above PDCP layer. On UE side Ciphering is enabled (since Mandatory) but with dummy ciphering algorithm, which is equivalent to not using ciphering. ROHC is not configured on UE Side.

On the SS Side the NR MAC test model expects no split bearers to be configured.

On the SS NR, Layer 1 is configured in the normal way. NR MAC is configured in a special mode, where it does not add any MAC headers in DL and /or not remove any MAC headers in UL directions respectively at DRB port. In this case, the TTCN shall provide the final MAC PDU, including padding. Except for this, the NR MAC layer shall perform all its other functions. SRBs are configured as in Layer 3 test model in normal operation.

On DRBs the NR RLC is configured in transparent mode. Hence with this configuration PDUs out of SS RLC are same as the SDUs in it. There is no NR PDCP and SDAP configured on SS Side. The ports are directly above NR RLC.

There are two different test modes in which NR MAC header addition/removal can be configured:

1. DL/UL header-transparent mode: no header addition in DL and no header removal in UL.
2. DL only header-transparent mode: no header addition in DL; UL NR MAC is configured in normal mode to remove MAC header and de-multiplex the MAC SDUs according to the logical channel Ids.

If SS NR MAC is configured in DL/UL header-transparent mode, the PDUs, exchanged at the DRB port between TTCN and SS, shall be the final MAC PDUs consisting of MAC, RLC and PDCP headers. TTCN code shall take care in DL of building MAC header, RLC headers and PDCP headers and in UL handle MAC, RLC and PDCP headers. TTCN code shall take care of maintaining sequence numbers and state variables for RLC and PDCP layers. During testing of multiple DRBs at the UE side, it shall still be possible to configure only one DRB on SS side with configuration in the figure 5.2.2.4.1-1. Other DRBs will not be configured, to facilitate routing of UL MAC PDUs. Multiplexing/de-multiplexing of PDUs meant/from different DRBs shall be performed in TTCN. Since the MAC layer does not evaluate the MAC headers in UL it cannot distinguish between SRB and DRB data in UL. There shall be no SRB traffic while MAC is configured in this test mode. The SS MAC shall take care of automatic repetitions/retransmission in UL and DL, based on normal MAC HARQ behaviour.

NOTE: There is no need to handle SDAP headers in TTCN for UL/DL as UE Test loop Mode A is above PDCP.

If SS NR MAC is configured in DL only header-transparent mode, the UL PDUs exchanged at the DRB port between TTCN and SS shall be final RLC PDUs consisting of RLC and PDCP headers. SS shall route these PDUs based on logical channel IDs. In DL, TTCN sends fully encoded MAC PDUs at the DRB port (consisting of MAC, RLC and PDCP headers). In this case TTCN needs to take care of maintaining sequence numbers and state variables for RLC and PDCP layers. Furthermore, in UL and DL the SS MAC layer shall be capable of dealing with SRB data (i.e. it shall handle DL RLC PDUs coming from SRB RLC layers or de-multiplex UL RLC PDUs to SRB's) as in normal mode. The SS MAC shall take care of automatic repetitions/retransmissions in UL and DL, based on normal MAC HARQ behaviour. TTCN shall ensure that no DL MAC SDUs in normal mode and DL MAC PDUs in test mode are mixed for the same TTI.

The UL Scheduling Grant and DL Scheduling assignments are configured from TTCN over system control port. SS reports PUCCH scheduling information reception over system indication port, if configured. In a similar way the reception of PRACH preambles is reported by SS over the same port.

#### 5.2.2.4.2 NR carrier aggregation

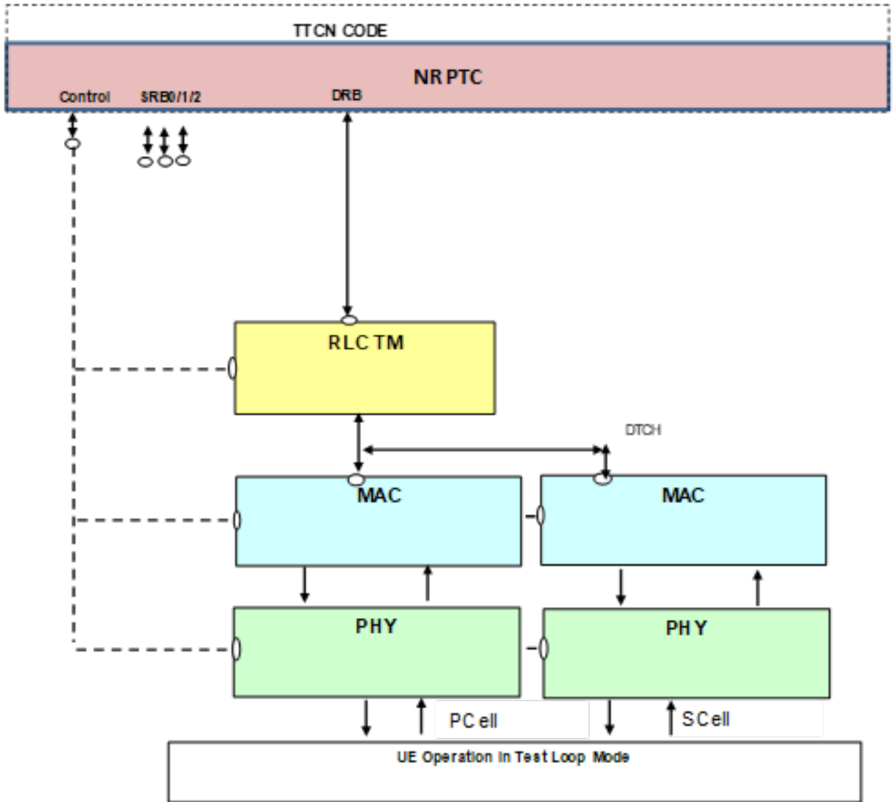


**Figure 5.2.2.4.2-1: Test model for NR/5GC MAC CA testing**

The NR/5GC MAC CA test model builds on top of the NR/5GC MAC test model, with the differences specified hereafter.

On the SS NR side, there is one PSCell and one SCell configured:

- PCell only: On DRBs the NR RLC is configured in transparent mode. Hence with this configuration PDUs out of SS RLC are same as the SDUs in it. There is no NR PDCP and SDAP configured in the SS. The ports are directly above NR RLC.

- PCell / SCell: Layer 1 is configured in the normal way. NR MAC is configured in a special mode, where it does not add any MAC headers in DL and /or not remove any MAC headers in UL directions respectively at DRB port. In this case, the TTCN shall provide the final MAC PDU, including padding. Except for this, the MAC layer shall perform all of its other functions.

The UL Scheduling Grant and DL Scheduling assignments are configured from TTCN over system control port. SS reports PUCCH scheduling information reception in PCell over system indication port, if configured. In a similar way the reception of PRACH preambles in PCell / SCell is reported by SS over the same port, if configured.

# 6 System interface

## 6.1 Upper tester interface

The Upper Tester (UT) interface is the same as specified in TS 36.523-3 [12] clause 5.

In addition, the following AT commands are also applied in the TTCN.

**Table 6.1-1: AT Commands**

| Command |
|---|
| AT+C5GNSSAI |
| AT+C5GNSSAIRDP |
| AT+C5GQOS |
| AT+CMICO |

AT commands are referred to TS 27.007 [49].

## 6.2 Abstract system primitives

### 6.2.1 Introduction

The present subclause 6.2 specifies the abstract system primitives (ASPs) used on the system interface to configure and control the SS.

### 6.2.2 General requirements and assumptions

The requirements and assumptions specified in TS 36.523-3 [12] subclause 6.1 apply to the present document.

### 6.2.3 E-UTRAN ASP definitions

Please refer to TS 36.523-3 [12] subclause 6.2.

### 6.2.4 NR ASP definitions

See Annex D.

# 7 Test methods and design considerations

## 7.1 Common aspects

### 7.1.1 Introduction

Subclause 7.1 specifies test methods and design considerations that are common to all 5GS deployment options.

## 7.1.2 Physical layer aspects

### 7.1.2.1 Search spaces and DCI

#### 7.1.2.1.1 Parameters

For each search space there are several parameters specifying the location of this search space in the time and frequency domain.

7.1.2.2.1.1Search space configuration

| | |
|---|---|
| **PDCCH monitoring periodicity** | |
| **Comment/description** | slot periodicity in time domain |
| **ASN.1 parameter** | SearchSpace.monitoringSlotPeriodicityAndOffset |
| **Core spec reference** | TS 38.213 [21] clause 10.1 |
| **PDCCH monitoring offset** | |
| **Comment/description** | slot offset |
| **ASN.1 parameter** | SearchSpace.monitoringSlotPeriodicityAndOffset |
| **Core spec reference** | TS 38.213 [21] clause 10.1 |
| **PDCCH monitoring pattern** | |
| **Comment/description** | first symbol(s) of the control resource set within a slot for PDCCH monitoring;<br>in general a search space starts with first symbol of a slot; the duration is given by the L1 parameter 'CORESET-time-duration' |
| **ASN.1 parameter** | SearchSpace.monitoringSymbolsWithinSlot |
| **Core spec reference** | TS 38.213 [21] clause 10.1 |
| **CORESET time duration** | |
| **Comment/description** | Duration of a search space in time domain: 1, 2 or 3 symbols |
| **ASN.1 parameter** | ControlResourceSet.duration |
| **Core spec reference** | TS 38.213 [21] clause 10.1 |
| **CORESET frequency domain allocation** | |
| **Comment/description** | Bitmap specifying the frequency domain allocation of a search space<br>NOTE: The allocations needs to fit into the BWP to which the CORESET belongs |
| **ASN.1 parameter** | ControlResourceSet.frequencyDomainResources |
| **Core spec reference** | TS 38.213 [21] clause 10.1, TS 38.211 [19] clause 7.3.2.2 |

#### 7.1.2.1.2 PDCCH search spaces

For each configured DL BWP, the TTCN may configure one or several search spaces.

For each search space, TTCN configures the SS with:

- The configuration of this search space as given to the UE, enabling the SS to determine the PDCCH transmission occasions (same as the UE PDCCH monitoring occasions) and associated CORESET.
  For SearchSpaceZero the configuration according to TS 38.213 [21] clauses 10.1 and 13 is mapped to ASN.1 type SearchSpace to configure the SS; for CORESET#0 the configuration according to TS 38.211 [19] clause 7.3.2.2 is mapped to ASN.1 type ControlResourceSet to configure the SS.

- The CCE aggregation level *L* that the SS shall use for PDCCH transmission on this search space.
  In general an aggregation level of 4 is used for SearchSpaceZero, common and UE-specific search space.

- The priority *P* of this search space that the SS shall consider in its PDCCH candidate selection algorithm.

  - a value of 0 represents the highest priority, a value of 1 the second highest priority and so on.

NOTE: "Search space" is used in terms of TS 38.213 [21] clause 10.1 and a single search space configuration (ASN.1 type 'SearchSpace') may contain several search spaces (see NR_BWP_SearchSpaceConfig_Type in Annex D).

#### 7.1.2.1.3 DCI formats

7.1.2.1.3.1Introduction

The SS shall support several DCI formats. For each 5GS option, the set of DCI formats to support may be different (see relevant option-specific subclauses).

7.1.2.1.3.2Timing

The transmission of DCI formats may be explicitly requested from TTCN or semi-autonomously handled by the SS. In case of explicit request:

- If the associated timing information is explicit, the TTCN shall ensure that this timing information matches one of the configured PDCCH transmission occasions.
- If the associated timing information is now, the SS shall determine and use the next valid PDCCH transmission occasion.

7.1.2.1.3.3DAI

In the DCI formats to be used by the SS, TTCN may set the DAI fields explicitly or may configure the SS to set the DAI fields automatically. TTCN configures the DAI parameters in the SS according to one of the columns of Table 7.1.2.1.3.3-1.

**Table 7.1.2.1.3.3-1: DAI parameter settings**

| **DAI field \ HARQ-ACK Codebook type** | **Semi-static** | | **Dynamic with 1 sub-codebook** | | **Dynamic with 2 sub-codebooks** | |
|---|---|---|---|---|---|---|
| | **Explicit mode** | **Auto mode** | **Explicit mode** | **Auto mode** | **Explicit mode** | **Auto mode** |
| DCI0_1 FirstDAI | Index | Automatic | Index | Automatic | Index | Automatic |
| DCI0_1 SecondDAI | None | None | None | None | Index | Automatic |
| DCI1_0 DAI | Index | Automatic | Index | Automatic | Index | Automatic |
| DCI1_1 DAI | None | None | Index | Automatic | Index | Automatic |

When TTCN configures the SS to use the automatic mode, the SS shall:

- Create DL association/transmission set, according to the setting by TTCN of TimeDomain, PdschHarqTimingIndicator and PucchResourceIndicator for DCI formats 1_x, their associated transmission timing information, and the set of serving cells configured, then
- Identify the need to multiplex a HARQ-ACK codebook into a PUSCH transmission according to above DL association/transmission set and the transmission timing information of received UL Grant(s), then
- Set the DAI fields in the DCI formats 1_x and 0_1 according to the above and the requirements on DAI values specified in TS 38.213 [21] subclause 9.1.2 for semi-static HARQ-ACK Codebook or subclause 9.1.3 for dynamic HARQ-ACK Codebook.

#### 7.1.2.1.4 PDCCH candidate selection

The SS shall consider search space priorities as configured by TTCN to find appropriate PDCCH candidates for scheduling of DCI formats in case of:

a) Overlapping search spaces:

- Depending on system configuration and slot number candidates of the different search spaces may be located in same (or overlapping) CCEs.

  - Example: system information is automatically scheduled by the SS and UE-specific data transmission requires scheduling of PDCCH for the same slot and symbols

=> Candidates of the UE-specific search space may collide with actual PDCCH of a common search space (e.g. system information).

b) Within a search space if different search space types are mapped to the same search space configuration.

For every PDCCH assignment (in terms of TS 38.213 [21] clause 10.1) the SS shall apply the PDCCH candidate selection algorithm specified hereafter:

1) For each search space the SS selects the PDCCH candidate with index m(search space, L) = 0

With (see TS 38.213 [21] subclause 10.1):

- candidate index m(search space, L) := 0 .. M(search space, L) - 1;
- M(search space, L): number of PDCCH candidates per CCE aggregation level for the given search space;
- L: CCE aggregation level

2) If there is an overlapping of the selected candidates, the SS shall:

- keep the PDCCH candidate of the search space with higher priority *P*,
- increment m for the search space with lower priority;

3) The SS shall repeat 2) until there is no overlapping anymore.

In the following cases the SS shall raise an error:

i) Collision of PDCCH candidates of search spaces with the same priority,

ii) When a DL transmission or a single UL grant is scheduled with specific TimingInfo and after applying the above rules there is no PDCCH candidate left anymore.
NOTE: For TimingInfo 'Now' there is no error as the SS can shift the transmission to the next PDCCH occasion

In case of continuous UL grant configuration, the SS shall not raise an error when a grant cannot be scheduled at a specific point in time but skip it, if the grant is configured to be at every occasion, or shift it to the next occasion otherwise.

### 7.1.2.2 Downlink resource allocation

#### 7.1.2.2.1 Parameters

There are several parameters specifying the resource allocation on PDCCH (see subclause 7.1.2.2.1.1) and PDSCH for a DL transmission. The following sub-clauses summarise the parameters being most relevant for downlink resource allocation from the test model's point of view.

7.1.2.2.1.1Time domain resource allocation

For time domain resource allocation, either a default PDSCH time domain allocation according to TS 38.214 [22] clause 5.1.2.1.1 is applied or a table (pdsch-AllocationList) is configured via RRC signalling (pdsch-ConfigCommon.pdsch-TimeDomainAllocationList or pdsch-Config.pdsch-TimeDomainAllocationList, see TS 38.331 [16]). This table corresponds to L1 parameter "pdsch-AllocationList" and the entries are referred to by DCI.

pdsch-AllocationList has the following fields:

| | |
|---|---|
| **PDSCH slot offset ($K_0$)** | |
| **Comment/description** | Slot offset of PDSCH transmission based on the corresponding PDCCH transmission (DCI)<br>Assuming the same numerology for PDSCH and PDCCH:<br>$K_0 = 0$ PDCCH and corresponding PDSCH transmission are in the same slot<br>$K_0 > 0$ PDCCH and corresponding PDSCH transmission are in different slots |
| **ASN.1 parameter** | PDSCH-TimeDomainResourceAllocation.k0 |
| **Core spec reference** | TS 38.214 [22] clause 5.1.2.1 |
| **PDSCH mapping type** | |
| **Comment/description** | PDSCH mapping type A or B<br>NOTE: In general - at least for early releases - type A is expected to be used by conformance testing (Type B seems to be intended for mini-slots) |
| **ASN.1 parameter** | PDSCH-TimeDomainResourceAllocation.mappingType |
| **Core spec reference** | TS 38.214 [22] clause 5.1.2.1 |
| **Start and length indicator (SLIV)** | |
| **Comment/description** | The SLIV specifies the starting symbol (S) and the number of symbols (L) of the PDSCH resource assignment according to TS 38.214 [22] clause 5.1.2.1; valid start/length combinations depend on the PDSCH mapping type |
| **ASN.1 parameter** | PDSCH-TimeDomainResourceAllocation.startSymbolAndLength |
| **Core spec reference** | TS 38.214 [22] clause 5.1.2.1 |

7.1.2.2.1.2Frequency domain resource allocation configured at the UE via RRC signalling

| | |
|---|---|
| **Resource allocation type** | |
| **Comment/description** | Specifies the format of the frequency domain resource assignment field of DCI format 1_1 (resource allocation type 0, resource allocation type 1 or both)<br>NOTE: for DCI format 1_0 this parameter seems to be not relevant. |
| **ASN.1 parameter** | PDSCH-Config.resourceAllocation |
| **Core spec reference** | TS 38.212 [20] clause 7.3.1.2.2 |

7.1.2.2.1.3DCI parameters

| | |
|---|---|
| **Frequency domain resource assignment** | |
| **Comment/description** | Resource allocation type 0: bitmap indicating resource block groups (RBGs) being allocated to the UE<br>Resource allocation type 1: resource indication value (RIV) indicating start and length of a set of contiguously allocated resource blocks<br>NOTE: for DCI format 1_0 only resource allocation type 1 is applicable (according to TS 38.214 [22] clause 5.1.2.2) |
| **Core spec reference** | TS 38.212 [20] clauses 7.3.1.2.1 and 7.3.1.2.2, TS 38.214 [22] clause 5.1.2.2 |
| **Time domain resource assignment** | |
| **Comment/description** | Index addressing pre-configured time domain resource allocation (see clause 7.1.2.2.1.1) |
| **Core spec reference** | TS 38.212 [20] clauses 7.3.1.2.1 and 7.3.1.2.2 |
| **VRB-to-PRB mapping** | |
| **Comment/description** | To distinguish non-interleaved and interleaved allocation of virtual resource blocks in case of resource allocation type 1 |
| **Core spec reference** | TS 38.212 [20] clauses 7.3.1.2.1 and 7.3.1.2.2, TS 38.214 [22] clause 5.1.2.2 |
| **Modulation and coding scheme (MCS)** | |
| **Comment/description** | Modulation and coding scheme according to TS 38.214 [22] clause 5.1.3:<br>The DCI provides the MCS index ($\mathbf{I_{MCS}}$) which refers to the respective tables in clause 5.1.3.1 of TS 38.214 [22] |
| **Core spec reference** | TS 38.212 [20] clauses 7.3.1.2.1 and 7.3.1.2.2, TS 38.214 [22] clause 5.1.3 |
| **Antenna port configuration** | |
| **Comment/description** | Configuration of antenna port(s) according to tables 7.3.1.2.2-1/2/3/4 of TS 38.212 [20] for DCI format 1_1: Specifies the number of CDM groups without data and the antenna ports being used for a transmission. The number of CDM groups affects the number of REs which cannot be used for PDSCH transmission according to step 1 of clause 5.1.3.2 in TS 38.214 [22]. The number of antenna ports being used for the DL transmission corresponds to the number of layers $\upsilon$ being used for the respective |

| | |
|---|---|
| | transport block transmission (1, 2, 3 or 4 layers per transport block).<br>DCI format 1_0 does not have any field for antenna port configuration:<br>TS 38.214 [22] clause 5.1.6.2 specifies that in general the UE shall assume 2 CDM groups i.e. there are no REs available for PDSCH transmission in any symbol where DMRS is sent. Regarding the number of layers υ=1 is assumed for PDSCH transmissions scheduled with DCI format 1_0 |
| **Core spec reference** | TS 38.212 [20] clauses 7.3.1.2.2, TS 38.214 [22] clause 5.1.3, TS 38.211 [19] clause 7.3.1.3/4 |

#### 7.1.2.2.2 Timing

The timing information provided by the request ASP for a DL transmission specifies the slot in which the DCI on PDCCH is transmitted scheduling the corresponding PDSCH transmission. The exact timing of the PDSCH transmission is depending on the parameters for time domain resource allocation as described in the previous clause. If the timing information specifies a specific slot it is up to TTCN that an appropriate search space is configured for this slot. The SS shall not schedule the DL transmission otherwise and may raise an error.

In case of TimingInfo indicating “Now” or “Any slot” it is up to the SS to find the appropriate slot for scheduling of the DCI. The SS shall not use slots in which SS/PBCH blocks are scheduled.
NOTE: The restriction for slots containing SS/PBCH can be removed when there is clarification in core specs (e.g. TS 38.214 [22]) how “rate matching around” SS/PBCH blocks is reflected in the calculation of the transport block size (see clause 7.1.2.2.4).

In case of TimingInfo not being “Now” TTCN shall ensure that the data is scheduled at least 100ms in advance. Furthermore, it is up to the test case prose to avoid any overlapping of PDSCH and PDCCH transmissions in time domain and it is up to TTCN implementation to address an appropriate slot for which the TBS size determination is well-defined according to clause 7.1.2.2.4; the SS shall raise an error otherwise.

Figures 7.1.2.2.2-1 and 7.1.2.2.2-2 illustrate the timing for $K_0 = 0$ and $K_0 > 0$.

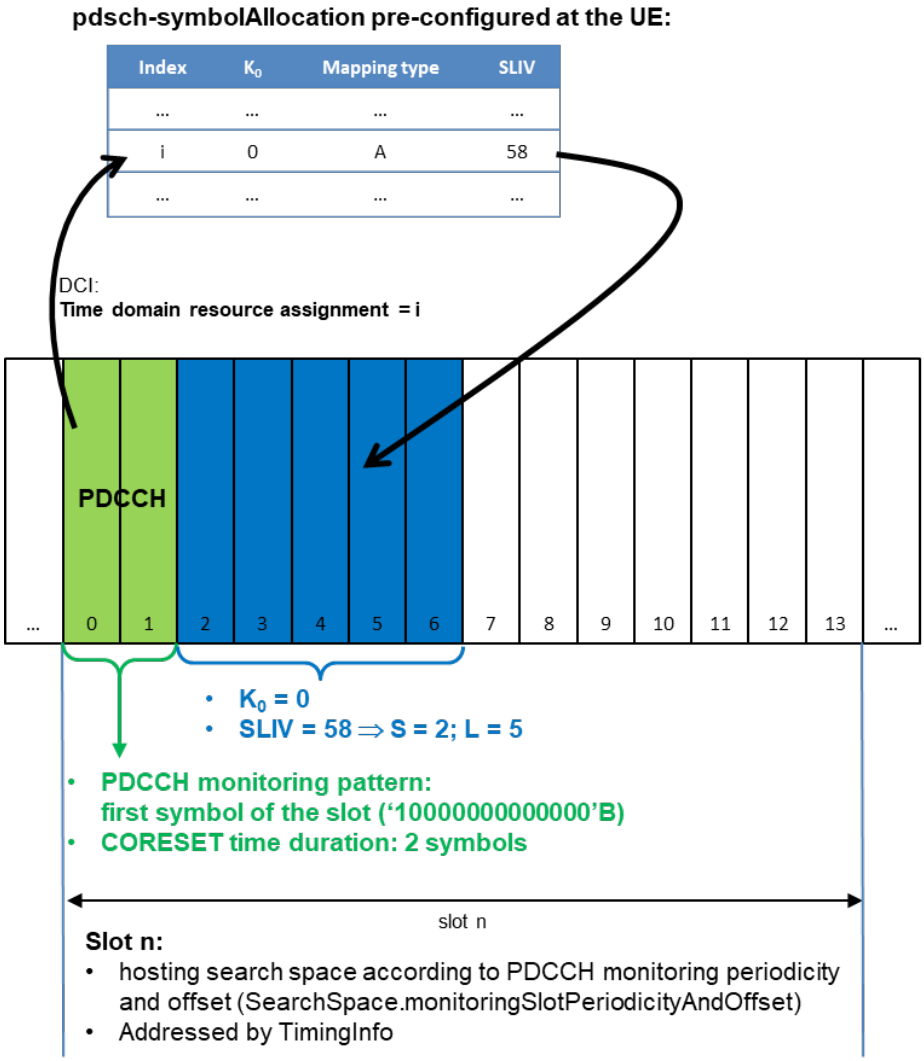


**Figure 7.1.2.2.2-1: Example for time domain resource allocation for $K_0 = 0$**

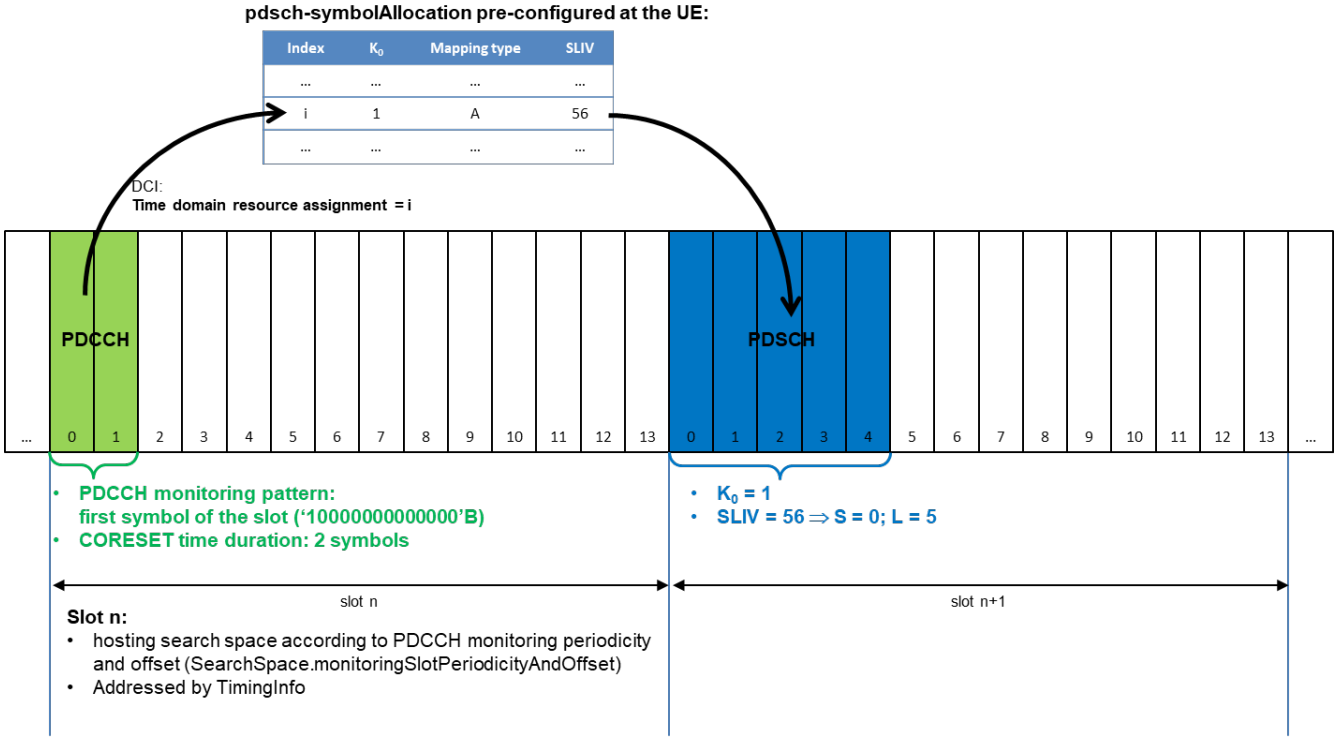


**Figure 7.1.2.2.2-2: Example for time domain resource allocation for $K_0 > 0$**

### 7.1.2.2.3 DL scheduling scheme

Different kinds of PDSCH transmissions need to be scheduled:

- System information (SI: SIB1 and other system information)
- Paging
- Random access response (RAR)
- DCCH/DTCH transmissions

The scheduling needs to be done so that there is no overlapping in frequency or time domain.

In general there are different ways to do the scheduling:

a) Multiplexing in frequency domain of a single BWP

b) Multiplexing in time domain of a single BWP (at slot or at symbol level)

c) Use of different BWPs: e.g. initial BWP for SI, RAR, Paging + dedicated BWP for DCCH/DTCH

d) Combinations of the above

In frequency domain the different kinds of PDSCH transmissions may use different resource allocation types (TS 38.214 [22] clause 5.1.2.2):

- Resource allocation (RA) type 0: Bitmap-based allocation of Resource Block Groups (RBGs): Applicable only for DCI format 1_1 ⇒ not applicable for scheduling of SI, Paging and RAR

- Resource allocation (RA) type 1, non-interleaved: continuous allocation of RBs with one-by-one mapping of virtual resource blocks (VRBs) to physical resource blocks (PRBs).
- Resource allocation (RA) type 1, interleaved: continuous allocation of RBs with interleaved VRB-to-PRB mapping according to TS 38.211 [19] clause 6.3.1.7.

7.1.2.2.3.1DL scheduling scheme: Frequency domain multiplexing, RA type1, non-interleaved

This scheduling scheme multiplexes the different kinds of PDSCH transmissions in the frequency domain of a single BWP by exclusively using resource allocation type 1 with non-interleaved VRB-to-PRB mapping. Assuming the resource blocks being numbered from 0 to $N_{BWP}$-1 (with $N_{BWP}$ being the size of the BWP) the following allocation is done:

**Table 7.1.2.2.3.1-1: Resource allocation for frequency domain multiplexing, RA type1, non-interleaved**

| **Kind of PDSCH transmission (Note 1)** | **CORESET #** | **SSB index of the cell (Note 4)** | **Resource block allocation (Note 2)** | |
|---|---|---|---|---|
| | | | **$RB_{start}$ (Note 2)** | **$L_{RBs,max}$ (Note 2)** |
| System information | 0 | SSB#1 | 0 | 7 |
| | | SSB#0 | $N_{BWP}$-7 | 7 |
| Paging (Note 3) | 0 | SSB#1 | 7 | $N_{BWP}$-7 |
| | | SSB#0 | 0 | $N_{BWP}$-7 |
| Random access response (Note 3) | 0 | SSB#1 | 7 | $N_{BWP}$-7 |
| | | SSB#0 | 0 | $N_{BWP}$-7 |
| CCCH and DCCH transmission on CSS (Note 3) | 0 | SSB#1 | 7 | $N_{BWP}$-7 |
| | | SSB#0 | 0 | $N_{BWP}$-7 |
| DCCH/DTCH transmissions (Note 3) | 1 | SSB#1 | 7+ Offset Carrier CORESET#0 [RBs] (Note 5) | $N_{BWP}$-7 |
| | | SSB#0 | 0 | $N_{BWP}$-7 |

NOTE 1: In context of a generic 5G test model it is not relevant whether or not there is SI and Paging for a given deployment option (e.g. EN-DC).
NOTE 2: $L_{RBs} \leq L_{RBs,max}$ with $L_{RBs}$: number of resource blocks being eventually used for a particular transmission. $L_{RBs}$ and $RB_{start}$ are as specified in TS 38.214 [22] subclause 5.1.2.2.2.
NOTE 3: In general Paging, Random access response and CCCH/DCCH/DTCH transmissions are mutual exclusive and therefore share the same allocation.
NOTE 4: The SSB index used by an NR Cell is specified in TS 38.508-1 [5] Table 4.4.2-2.
NOTE 5: Offset Carrier CORESET#0 [RBs] values are specified in the frequency tables in TS 38.508-1 [5].

In order to achieve a test case behaviour being independent from the frequency channel bandwidth $N_{BWP}$ is limited to the minimum value of 24 RBs in accordance to Table 5.3.2-1 of TS 38.101-1/2 [5, 6]. This implies that $L_{RBs,max}$< 24 RBs for all configurations.

In general PDCCH and corresponding PDSCH transmissions are in the same slot ($K_0$ = 0).

### 7.1.2.2.4 Transport block size determination

TS 38.214 [22] clause 5.1.3.2 describes the transport block size (TBS) determination from the UE's point of view: the UE calculates the TBS depending on several parameters. From a test model's point of view appropriate values need to be found for the parameters to achieve a given TBS.

There are two modes specified for DL scheduling:

- automatic mode

- explicit mode

In explicit mode all parameters for the TBS determination are provided by TTCN, i.e. it is up to the TTCN implementation to find proper values. In automatic mode TTCN only provides $RB_{start}$ and $L_{RBs,max}$ and it is up to the SS to determine the values of $L_{RBs}$ and $I_{MCS}$ to achieve the TBS which is needed for a particular DL transmission.

The SS shall apply the rules as described in clause 7.1.2.2.4.2.

7.1.2.2.4.1Parameters affecting TBS determination

The following parameters need to be considered for TBS determination:

**Table 7.1.2.2.4.1-1: Parameters affecting TBS determination**

| Parameter | Comment/Description | Reference |
|---|---|---|
| Number of RBs in frequency domain | Indicated by DCI | Clause 7.1.2.2.1.3 |
| Number of symbols in time domain | Pre-configured at UE, selected by DCI; corresponds to “PDSCH duration” TS 38.211 [19] clause 7.4.1.1.2 | Clause 7.1.2.2.1.1 |
| MCS index $I_{MCS}$ | Indicated by DCI:<br>Modulation Order $\mathbf{Q_m}$, Target code Rate **R** | Clause 7.1.2.2.1.3;<br>TS 38.214 [22] Table 5.1.3.1-1 and 5.1.3.1-2 |
| Number of layers **υ** | The number of layers being used for transmission of a transport block can be derived from the antenna port configuration provided by DCI format 1_1 taking into account the layer mapping according to TS 38.211 clause 7.3.1.3. For DCI format 1_1 in general **υ** = 1 according to TS 38.508-1 [5] Table 4.3.6.1.2.2-1.<br>For DCI format 1_0 **υ** = 1 is assumed (in accordance to TS 38.214 [22] clause 5.1.6.2 specifying antenna port 1000 to be used for DMRS). | TS 38.214 [22] clause 5.1.1.1 and 5.1.6.2,<br>TS 38.211 [19] clause 7.3.1.4,<br>TS 38.212 [20] clause 7.3.1.2.2 and tables 7.3.1.2.2-1/2/3/4 |
| PDSCH mcs-Table | Pre-configured at the UE via RRC signalling:<br>PDSCH-Config.mcs-Table := {qam64, qam256};<br>indicates which MCS table to be applied when DL transmission is scheduled with C-RNTI<br>NOTE: qam256 is applicable only when DCI format 1_1 is used. | TS 38.214 [22] clause 5.1.3.1 |
| Number of REs per PRB | Number of REs per PRB which are applicable for the PDSCH transmission | Table 7.1.2.2.4.1-2 |
| Rate matching | TS 38.214 [22] clause 5.1.3.2 does not specify how rate matching needs to be considered for TBS determination<br>⇒ at least for early implementations slots containing SS/PBCH block transmission shall not be used for PDSCH transmissions and further rate matching is assumed not to be configured via RRC signalling | TS 38.214 [22] clause 5.1.4 |

**Table 7.1.2.2.4.1-2: Parameters affecting number of REs allocated for PDSCH per PRB**

| Parameter | Comment/Description | Reference |
|---|---|---|

| | | |
|---|---|---|
| PDSCH mapping type | Type A or B | Clause 7.1.2.2.1.1; TS 38.211 [19] clause 7.4.1.1.2 |
| dmrs-Type | DMRS Configuration type 1 or 2 as indicated to the UE by DMRS-DownlinkConfig.dmrs-Type | TS 38.211 [19] clause 7.4.1.1.2 |
| dmrs-AdditionalPosition | Number of additional DMRS positions:<br>For DCI format 1_1 as indicated to the UE by DMRS-DownlinkConfig.dmrs-AdditionalPosition 0, 1, 2 or 3 additional positions.<br>For DCI format 1_0 according to TS 38.214 [22] clause 5.1.6.2 the UE shall assume dmrs-AdditionalPosition='pos2' | TS 38.211 [19] clause 7.4.1.1.2 and tables 7.4.1.1.2-3/4 |
| maxLength | Number of OFDM symbols used for DMRS:<br>For DCI format 1_1 as indicated to the UE by DMRS-DownlinkConfig.maxLength:<br>Single or double symbol DM-RS.<br>For DCI format 1_0 according to TS 38.214 [22] clause 5.1.6.2 single symbol DM-RS is applied. | TS 38.211 [19] clause 7.4.1.1.2 and table 7.4.1.1.2-5 |
| number of CDM groups without data | The maximum number of CDM groups without data depends on the DMRS Configuration type (dmrs-Type):<br>type 1: up to 2 CDM groups (TS 38.211 [19] Table 7.4.1.1.2-1)<br>type 2: up to 3 CDM groups (TS 38.211 [19] Table 7.4.1.1.2-2)<br><br>For DCI format 1_1 the number of CDM groups without data for a single transmission is determined by the antenna port configuration provided in the DCI (TS 38.212 [20] tables 7.3.1.2.2-1/2/3/4)<br><br>For DCI format 1_0 according to TS 38.214 [22] clause 5.1.6.2 for mapping type A and PDSCH duration > 2 the UE shall assume that the number of DM-RS CDM groups without data is 2 (what results in PDSCH not being present in any symbol carrying DM-RS) | TS 38.211 [19] clause 7.4.1.1.2,<br>TS 38.212 [20] clause 7.3.1.2.2 and tables 7.3.1.2.2-1/2/3/4,<br>TS 38.214 [22] clause 5.1.3.2 and 5.1.6.2 |
| xOverhead | Number of REs used for additional overhead as indicated to the UE by PDSCH-ServingCellConfig.xOverhead:<br>0, 6, 12, 18 REs | TS 38.214 [22] clause 5.1.3.2 |
| PDSCH duration | Number of symbols allocated for the PDSCH transmission | Clause 7.1.2.2.1.1 |

Table 7.1.2.2.4.1-3 gives examples for the position of DMRS within a resource block depending on different parameters, with DMRS CDM group 0 shown in blue and DMRS CDM group 1 (if any) shown in green. For DCI format 1_0 and PDSCH mapping type A the UE assumes both CDM groups to be used; for DCI format 1_1 the number of DMRS CDM groups without data depends on the antenna port configuration of the DCI: In case of dmrs-Type=1, maxLength=1 and only one code word TS 38.212 [20] table 7.3.1.2.2-1 is applied and ‘0000’B (as specified in TS 38.508-1 [5] table 4.3.6.1.2.2-1) corresponds one DRMS CDM group at port 1000 which results in the REs shown in blue.

**Table 7.1.2.2.4.1-3: Examples for the position of DMRS in an RB with PDSCH mapping type A, DMRS configuration type 1, maxLength=1, dmrs-AdditionalPosition=2**

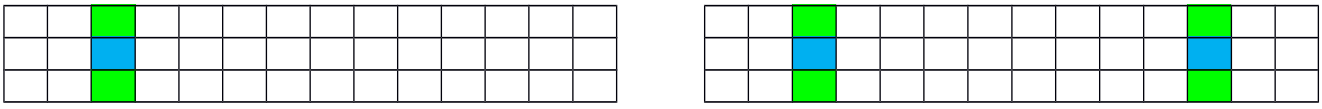

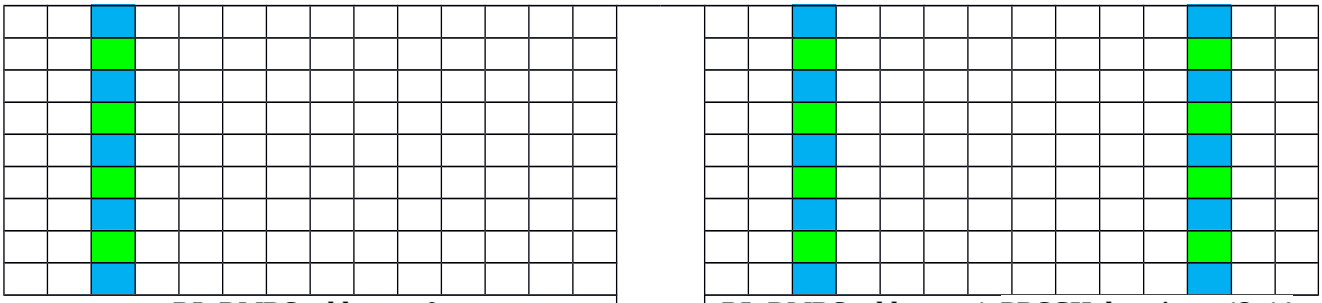

**DL-DMRS-add-pos = 0:**

$k = 4n + 2k' + \Delta$; $k' = 0, 1$; $\Delta = 0, 1$

$l_0 = 2$



**DL-DMRS-add-pos = 1, PDSCH duration = 13, 14:**

$k = 4n + 2k' + \Delta$; $k' = 0, 1$; $\Delta = 0, 1$

$l_0 = 2$, $l_1 = 11$

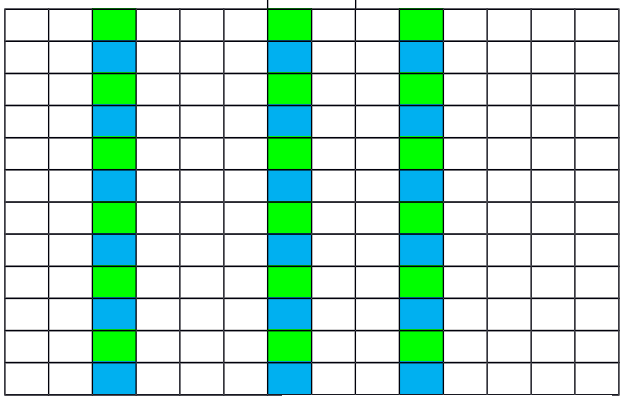

**DL-DMRS-add-pos = 2, PDSCH duration = 10, 11, 12:**

$k = 4n + 2k' + \Delta$; $k' = 0, 1$; $\Delta = 0, 1$

$l_0 = 2$, $l_1 = 6$, $l_2 = 9$

For PDSCH mapping type A and single-symbol DMRS according to TS 38.211 [19] Table 7.4.1.1.2-3 the number $N_{\text{Symbols with DMRS}}$ of symbols with DMRS per resource block is as shown in table 7.1.2.2.4.1-4.

**Table 7.1.2.2.4.1-4: Number of symbols with DMRS per resource block**

<table>
<tr><th rowspan="2">PDSCH duration</th><th colspan="4">dmrs-AdditionalPosition</th></tr>
<tr><th>0</th><th>1</th><th>2</th><th>3</th></tr>
<tr><td>2</td><td rowspan="12">1</td><td rowspan="6">1</td><td rowspan="6">1</td><td rowspan="6">1</td></tr>
<tr><td>3</td></tr>
<tr><td>4</td></tr>
<tr><td>5</td></tr>
<tr><td>6</td></tr>
<tr><td>7</td></tr>
<tr><td>8</td><td rowspan="6">2</td><td rowspan="2">2</td><td rowspan="2">2</td></tr>
<tr><td>9</td></tr>
<tr><td>10</td><td rowspan="4">3</td><td rowspan="2">3</td></tr>
<tr><td>11</td></tr>
<tr><td>12</td><td rowspan="3">4</td></tr>
<tr><td>13</td></tr>
<tr><td>14</td></tr>
</table>

Assuming DMRS configuration type 1, maxLength=1, Xoh-PDSCH=0 and no rate matching, depending on the number of CDM groups without data, this results in the number of REs for DMRS per PRB including the overhead of the DMRS CDM groups without data as shown in Table 7.1.2.2.4.1-5.

**Table 7.1.2.2.4.1-5: Number of REs for DMRS per PRB including the overhead of the DMRS CDM groups without data for DMRS configuration type 1, maxLength=1, Xoh-PDSCH=0, no rate matching**

| | dmrs-AdditionalPosition | PDSCH duration | Number of REs for DMRS | |
|---|---|---|---|---|
| DCI format 1_1 indicating one DMRS CDM group without data according to TS 38.212 [20] Table 7.3.1.2.2-1 | 0 (NOTE 1) | any | 6 | $6 * N_{\text{Symbols with DMRS}}$ |
| | 1 (NOTE 1) | < 8 | 6 | |
| | | ≥ 8 | 12 | |
| DCI format 1_0 | 2 (NOTE 2) | < 8 | 12 | $12 * N_{\text{Symbols with DMRS}}$ |
| | | 8, 9 | 24 | |
| | | > 9 | 36 | |
| NOTE 1: TS 38.508-1 [5] table 4.6.3-36 specifies pos0 or pos1<br>NOTE 2: pos2 for DCI format 1_0 according to TS 38.214 clause 5.1.6.2 | | | | |

7.1.2.2.4.2Automatic mode - Determination of TBS and corresponding $\mathbf{I_{MCS}}$ and $\mathbf{L_{RBs}}$

In automatic mode, for each PDSCH transmission, the SS shall autonomously select a TBS and a $\mathbf{L_{RBs}}$ **/** $\mathbf{I_{MCS}}$ pair for this TBS.

### Common requirements for TBS determination:

The SS shall follow the below rules to determine the TBS for a PDSCH transmission:

- The SS shall maximise the data being sent in a single transmission (i.e. the SS shall not do RLC segmentation without need);
- The SS shall minimise padding (i.e. the SS shall not use a TBS greater than needed);
- If the maximum TBS for a given configuration is not sufficient to carry all data then:
  - if the RLC layer configuration at the SS allows segmentation for the given bearer then:
    - the SS shall apply RLC segmentation with minimised number of segments;
  - else:
    - the SS shall raise an error.

### $\mathbf{L_{RBs}}$ / $\mathbf{I_{MCS}}$ pair determination:

Using the selected TBS, the SS shall apply the following rules:

- When the TBS can be achieved with more than one $\mathbf{L_{RBs}}$ **/** $\mathbf{I_{MCS}}$ pairs the SS shall choose the $\mathbf{L_{RBs}}$ **/** $\mathbf{I_{MCS}}$ pairs with maximum $\mathbf{L_{RBs}}$;
- When there is more than one $\mathbf{L_{RBs}}$ **/** $\mathbf{I_{MCS}}$ pair with maximum $\mathbf{L_{RBs}}$ the pair with minimum $\mathbf{I_{MCS}}$ shall be chosen.

The SS implementation shall comply to the above requirements and be based on the following assumptions (unless stated otherwise for a specific table):

- Number of layers υ = 1
- PDSCH mapping type A
- dmrs-Type: type1
- maxLength: single symbol DM-RS
- xOverhead = 0

Further details are left up to SS implementation.

7.1.2.2.4.3Explicit mode - Determination of $\mathbf{I_{MCS}}$ and $\mathbf{L_{RBs}}$ for given TBS

In explicit mode, for a PDSCH scheduled by a PDCCH with CRC scrambled by C-RNTI, it is up to the TTCN to determine the values of $I_{MCS}$ and $L_{RBs}$ to achieve the TBS specified in a test case prose.

Annex B.1 may be used to select a valid pair of $\{L_{RBs}; I_{MCS}\}$. The NR TBS table to be used is based on the TS 38.508-1 [5] default configurations outlined in Tables 7.1.2.2.4.3-1 and 7.1.2.2.4.3-2 below.

**Table 7.1.2.2.4.3-1: TS 38.508-1 [5] default configurations for DCI format 1_0 affecting DL scheduling**

| Parameter | Value | Reference(s) |
|---|---|---|
| MCS index table | table 5.1.3.1-1<br>(MCS index table 1) | TS 38.214 [22] clause 5.1.3.1 with DCI format 1_0 |
| dmrs-AdditionalPosition | 2 | Table 7.1.2.2.4.1-2 with DCI format 1_0 |
| number of CDM groups | 2 | Table 7.1.2.2.4.1-2 with DCI format 1_0, mapping type A and PDSCH duration > 2 |
| PDSCH duration | 12 (mapping type A) | TS 38.508-1 [5] Tables 4.6.3-76 (*PDSCH-ConfigCommon*) and 4.6.3-78 (*PDSCH-TimeDomainResourceAllocationList*) and DCI format with “Time domain resource assignment”=0 |

**Table 7.1.2.2.4.3-2: TS 38.508-1 [5] default configurations for DCI format 1_1 affecting DL scheduling**

| Parameter | Value | Reference(s) |
|---|---|---|
| MCS index table | table 5.1.3.1-1<br>(MCS index table 1) | TS 38.214 [22] clause 5.1.3.1 with DCI format 1_1 and mcs-Table=qam64 as according to TS 38.508-1 [5] Tables 4.6.3-75 |
| dmrs-AdditionalPosition | 1 (FR1)<br>0 (FR2) | TS 38.508-1 [5] Table 4.6.3-36 (DMRS-DownlinkConfig) |
| number of CDM groups | 1 | according to antenna port configuration (TS 38.508-1 [5] Table 4.3.6.1.2.2-1) |
| PDSCH duration | 12 (mapping type A) | TS 38.508-1 [5] Tables 4.6.3-76 (*PDSCH-ConfigCommon*) and 4.6.3-78 (*PDSCH-TimeDomainResourceAllocationList*) and DCI format with “Time domain resource assignment”=0 |

## 7.1.2.3 Uplink grant

### 7.1.2.3.1 General principles and grant allocation types

Uplink grants assignments for NR follow similar principles as for LTE (TS 36.523-3 [12] clause 7.2).

7.1.2.3.1.1PUCCH synchronisation in connected mode

To prevent the UE from doing RACH procedure for purpose of PUCCH synchronisation the SS gets configured to maintain PUCCH synchronisation at UE by periodically sending a MAC PDU containing the MAC control element 'Timing Advance Command'. The period as configured by TTCN is set to 80 % of the ‘*timeAlignmentTimer*' value configured at UE.

As in general the PUCCH synchronisation is not time critical, the SS shall choose the next possible occasion for sending of the Timing Advance Command from expiry of the period onward (i.e. the SS shall not raise an error when sending of the Timing Advance Command is not possible at the calculated end of the period).

7.1.2.3.1.2Grant allocation types

In general PUCCH synchronisation is configured at the SS for the different grant allocation types when the UE is in connected mode.

7.1.2.3.1.2.1 Grant allocation by RACH procedure

The UE gets assigned an uplink grant by the Random Access Response message being configured at the SS: Per default an UL grant as according to Table 7.1.2.3.3-1 is configured by TTCN.

7.1.2.3.1.2.2 Grant allocation type 1: Uplink grant triggered by SR

The SS gets configured to automatically assign an uplink grant when requested by the UE with a Scheduling Request (SR). The size of this UL grant is configured by TTCN, i.e. there is no requirement for SS implementation to determine the grant size but the configured value shall be used regardless of how much data the UE wants to send. The SS shall assign the UL grant within less than 10ms after it has received the scheduling requests.

7.1.2.3.1.2.3 Grant allocation type 2: Periodic uplink grant

The SS gets configured to assign uplink grants periodically irrespective of any Scheduling Request sent by the UE. The configuration specifies:

- the uplink grant size
- the periodicity: once, several times, continuous
- the period in number of slots (e.g. every slot, every second slot, etc.)

The first uplink grant transmitted is as specified in the explicit timing information. If timing information is "now" the SS selects the first suitable subframe for UL transmission.

The SS shall not assign any additional uplink grant due to a Scheduling Request sent by the UE.

7.1.2.3.1.2.4 Grant allocation type 3: Single uplink grant

Special case of Grant allocation type 2: Uplink grant is assigned only once.

7.1.2.3.1.2.5 Grant allocation type 4: Periodic uplink grant triggered by SR

Combination of Grant allocation type 1 and 2: Periodic uplink grant according to clause 7.1.2.3.1.2.3 is triggered by a Scheduling Request sent by the UE.

### 7.1.2.3.2 Determination of explicit uplink grants

7.1.2.3.2.1Parameters

Similar as for the downlink the UE gets preconfigured with parameters for time and frequency domain and a particular UL transmission is addressed by DCI:

1. Time domain resource allocation:
   Similar parameters are defined for UL as for DL (see clause 7.1.2.2.1.1, TS 38.214 [22] clause 6.1.2.1).

2. Frequency domain resource allocation:
   Similar as for the DL there is resource allocation type 0 and 1 for the UL (see clause 7.1.2.2.1.2, TS 38.214 [22] clause 6.1.2.2).
   Uplink resource allocation type 1 is assumed to be used for signalling conformance testing.

3. DCI parameters:
   Similar parameters are defined for UL as for DL (see clause 7.1.2.2.1.3, TS 38.212 [20] clauses 7.3.1.1.1 and 7.3.1.1.2, TS 38.214 [22] clause 6.1).

In detail for a particular uplink grant the parameters listed in tables 7.1.2.3.2.1-1 and 7.1.2.3.2.1-2 need to be considered.

**Table 7.1.2.3.2.1-1: Parameters affecting TBS determination**

| Parameter | Comment/Description | Reference |
|---|---|---|
| Number of RBs in frequency domain | Indicated by DCI | |
| Number of symbols in time domain | Pre-configured at UE, selected by DCI; corresponds to “Duration in symbols” TS 38.211 [19] clause 6.4.1.1.3 | |
| MCS index $I_{MCS}$ | Indicated by DCI:<br>Modulation Order $\mathbf{Q_m}$, Target code Rate **R** | TS 38.214 [22] clause 6.1.4.1;<br>TS 38.214 [22] Table 5.1.3.1-1, 5.1.3.1-2, 6.1.4.1-1 |
| Number of layers **υ** | The number of layers being used for transmission of a transport block can be derived from the precoding information and the antenna port configuration provided by DCI format 0_1.<br>For DCI format 0_1 in general υ = 1 according to TS 38.508-1 [5] Table 4.3.6.1.1.2-1.<br>For DCI format 0_0 υ = 1 is assumed. | TS 38.214 [22] clause 6.1.1.1,<br>TS 38.211 [19] clause 6.3.1.5,<br>TS 38.212 [20] clause 7.3.1.1.2 and tables Table 7.3.1.1.2-2..5 |
| PUSCH Parameters mcs-Table, mcs-TableTransformPrecoder, transformPrecoder, msg3-transformPrecoder | Pre-configured at the UE via RRC signalling:<br>PUSCH-Config.mcs-Table := {qam64, qam256}; (NOTE 1)<br>PUSCH-Config.mcs-TableTransformPrecoder := {qam64, qam256}; (NOTE 1)<br>PUSCH-Config.transformPrecoder := {enabled, disabled}; or RACH-ConfigCommon.msg3-transformPrecoder := {enabled, disabled} (NOTE 2)<br>indicates which MCS table to be applied<br>NOTE 1: qam256 is applicable only when DCI format 0_1 is used.<br>NOTE 2: msg3-transformPrecoder applies when DCI format 0_0 is used or when transformPrecoder is not configured; transformPrecoder applies only when DCI format 0_1 is used. | TS 38.214 [22] clause 6.1.4.1 and clause 6.1.3 |
| Support of pi/2 BPSK modulation | In case of transformPrecoder==enabled and mcs-TableTransformPrecoder,==qam64 the first two entries of TS 38.214 [22] Table 6.1.4.1-1 depend on whether or not the UE supports pi/2 BPSK modulation. | TS 38.214 [22] clause 6.1.4.1 |
| Number of REs per PRB | Number of REs per PRB which are applicable for the PUSCH transmission | Table 7.1.2.3.2.1-2 |

**Table 7.1.2.3.2.1-2: Parameters affecting number of REs allocated for PUSCH per PRB**

| Parameter | Comment/Description | Reference |
|---|---|---|

| | | |
|---|---|---|
| PUSCH mapping type | Type A or B | TS 38.211 [19] clause 6.4.1.1.3 |
| dmrs-Type | DMRS Configuration type 1 or 2 as indicated to the UE by DMRS-UplinkConfig.dmrs-Type | TS 38.211 [19] clause 6.4.1.1.3 |
| dmrs-AdditionalPosition | Number of additional DMRS positions:<br>For DCI format 0_1 as indicated to the UE by DMRS-UplinkConfig.dmrs-AdditionalPosition: 0, 1, 2 or 3 additional positions.<br>For DCI format 0_0 according to TS 38.214 [22] clause 6.2.2 the UE shall assume dmrs-AdditionalPosition='pos2' when frequency hopping is disabled and dmrs-AdditionalPosition='pos1' when frequency hopping is enabled. | TS 38.211 [19] clause 6.4.1.1.3and tables 6.4.1.1.3-3/4,<br>TS 38.214 [22] clause 6.2.2 |
| maxLength | Number of OFDM symbols used for DMRS:<br>For DCI format 0_1 as indicated to the UE by DMRS-UplinkConfig.maxLength: Single or double symbol DM-RS.<br>For DCI format 0_0 according to TS 38.214 [22] clause 6.2.2 single symbol DM-RS is applied. | TS 38.211 [19] clause 6.4.1.1.3 and table 6.4.1.1.3-5,<br>TS 38.214 [22] clause 6.2.2 |
| number of CDM groups without data | The maximum number of CDM groups without data depends on the DMRS Configuration type (dmrs-Type):<br>type 1: up to 2 CDM groups (TS 38.211 [19] Table 6.4.1.1.3-1)<br>type 2: up to 3 CDM groups (TS 38.211 [19] Table 6.4.1.1.3-2)<br>For DCI format 0_1 the number of CDM groups without data for a single transmission is determined by the antenna port configuration provided in the DCI (TS 38.212 [20] tables 7.3.1.1.2-6..23)<br><br>For DCI format 0_0 according to TS 38.214 [22] clause 6.2.2 for PUSCH duration > 2 the UE shall assume that the number of DM-RS CDM groups without data is 2 (what results in PUSCH not being present in any symbol carrying DM-RS); for PUSCH duration = 2 the number of DM-RS CDM groups without data is 1. | TS 38.211 [19] clause 6.4.1.1.3,<br>TS 38.212 [20] clause 7.3.1.1.2 and tables 7.3.1.1.2-6..23,<br>TS 38.214 [22] clause 6.1.4.2 and 6.2.2 |
| xOverhead | Number of REs used for additional overhead as indicated to the UE by PUSCH-ServingCellConfig.xOverhead:<br>0, 6, 12, 18 REs | TS 38.214 [22] clause 6.1.4.2 |
| PUSCH duration | Number of symbols allocated for the PUSCH transmission by DCI | |

The number of REs for DMRS and PDSCH per PRB is determined in the same way for UL as for DL (TS 38.211 [19] clause 7.4.1.1.2) ⇒ The same values are applicable for UL and DL (see Table 7.1.2.2.4.1-4).

7.1.2.3.2.2Determination of $\mathbf{I_{MCS}}$ and $\mathbf{L_{RBs}}$ for given TBS

Uplink grant assignments are fully controlled by TTCN, i.e. it is up to the TTCN to determine the values of $I_{MCS}$ and $L_{RBs}$ to achieve the TBS specified in a test case prose.

Annex B.2 may be used to select a valid pair of $\{L_{RBs}; I_{MCS}\}$, based on the following assumptions (unless stated otherwise for a specific table):

- Number of layers $\upsilon = 1$

- PUSCH mapping type A (as according to PUSCH-TimeDomainResourceAllocationList and PUSCH-Config in TS 38.508-1 [5])
- dmrs-Type: type1
- maxLength: single symbol DM-RS
- xOverhead = 0

The NR TBS tables for uplink grants in annex B.2 are based on the TS 38.508-1 [5] default configurations outlined in Tables 7.1.2.3.2.2-1 and 7.1.2.3.2.2-2 below.

**Table 7.1.2.3.2.2-1: TS 38.508-1 [5] default configurations for DCI format 0_0 affecting UL scheduling**

| Parameter | Value | Reference(s) |
|---|---|---|
| MCS index table | table 5.1.3.1-1 (MCS index table 1) | TS 38.214 [22] clause 6.1.4.1 with DCI format 0_0, transform precoding disabled as per TS 38.508-1 [5] Table 4.6.3-97 (*RACH-ConfigCommon.msg3-transformPrecoder*) |
| dmrs-AdditionalPosition | 2 | Table 7.1.2.3.2.1-2 with DCI format 0_0, no frequency hopping as per TS 38.508-1 [5] Table 4.3.6.1.1.1-1 |
| number of CDM groups | 2 | Table 7.1.2.3.2.1-2 with DCI format 0_0, transform precoding disabled as per TS 38.508-1 [5] Table 4.6.3-97 (*RACH-ConfigCommon.msg3-transformPrecoder*) |
| PUSCH duration in symbols | 14 | TS 38.508-1 [5] Tables 4.6.3-90 (PUSCH-ConfigCommon) and 4.6.3-93 (PUSCH-TimeDomainResourceAllocationList) and DCI format with “Time domain resource assignment”=0 |

**Table 7.1.2.3.2.2-2: TS 38.508-1 [5] default configurations for DCI format 0_1 affecting UL scheduling**

| Parameter | Value | Reference(s) |
|---|---|---|
| MCS index table | table 5.1.3.1-1 (MCS index table 1) | TS 38.214 [22] clause 6.1.4.1 with DCI format 0_1, transform precoding disabled as per TS 38.508-1 [5] Table 4.6.3-89 (*PUSCH-Config.transformPrecoder*) |
| dmrs-AdditionalPosition | 1 (FR1)<br>0 (FR2) | TS 38.508-1 [5] Table 4.6.3-37 (DMRS-UplinkConfig) |
| number of CDM groups | 1 | according to antenna port configuration (TS 38.508-1 [5] Table 4.3.6.1.1.2-1) |
| PUSCH duration in symbols | 14 | TS 38.508-1 [5] Tables 4.6.3-90 (*PUSCH-ConfigCommon*) and 4.6.3-93 (*PUSCH-TimeDomainResourceAllocationList*) and DCI format with “Time domain resource assignment”=0 |

NOTE: Configuration according to Table 7.1.2.3.2.2-2 with PUSCH duration of 14 symbols and one CDM group results in the same TBS sizes for dmrs-AdditionalPosition=0 and dmrs-AdditionalPosition=1 as according to step 1 of TS 38.214 [22] clause 5.1.3.2 the number of resource elements allocated for PDSCH per resource block is limited by 156.
⇒ The transport block sizes corresponding to Table 7.1.2.3.2.2-2 are the same for FR1 and FR2.

### 7.1.2.3.3 Default grants

In general test cases for layer 3 and above do not need test case specific grants but use default grants as listed in table 7.1.2.3.3-1.

**Table 7.1.2.3.3-1: Default grants**

| Purpose | Grant size (NOTE 1) or | Comment |
|---|---|---|

| | **{$L_{RBs}$ $I_{MCS}$} pair** | |
|---|---|---|
| Scheduling of Random Access Msg3, initial access | 256 bits (NOTE 2) | grant provided by Random Access Response (Msg2) |
| Scheduling of Random Access Msg3, handover or EN-DC | 48 bits (NOTE 2, 3) | grant provided by Random Access Response (Msg2) |
| Random Access Msg4 for C-RNTI based CBRA for synchronisation (e.g. EN-DC) | $L_{RBs}$ = 1, $I_{MCS}$ = 0 | minimum grant (24 or 32 bits) |
| Random Access Msg4 for C-RNTI based CBRA for handover | 144 bits (NOTE 4) | initial UL grant after handover |
| Default USS grant | $L_{RBs}$ = 24, $I_{MCS}$ = 9 (NOTE 5) | default grant: e.g. for test cases with main focus on control plane signalling |

NOTE 1: In general for a given grant size TTCN uses the {$L_{RBs}$ $I_{MCS}$} pair according to annex B.2.
NOTE 2: According to TS 38.213 [21] subclause 8.3, the RAR UL grant is always interpreted according to DCI format 0_0, so contents of Table 7.1.2.3.2.2-1 apply.
NOTE 3: Minimum grant which can be assigned by the Random Access Response: The grant is sufficient to convey C-RNTI (3 bytes) and short BSR (2 bytes) or long BSR (minimum of 3 bytes). Even with short BSR there is not enough space to convey any segment of the *RRCReconfigurationComplete* (at least 6 bytes: 2 bytes MAC header + 3 bytes RLC header + 1 byte payload).
NOTE 4: Initial grant of RA procedure big enough to completely convey the *RRCReconfigurationComplete* (10 bits). This requires a minimum of 13 bytes (2 bytes MAC header + 3 bytes RLC header + 6 bytes PDCP header + 2 bytes payload). Additionally an optional PHR MAC element (3 bytes) needs to be considered since the PHR has higher priority than the MAC SDU. Any further user data would require a minimum of 6 additional bytes (2 bytes MAC header + 3 bytes RLC header + 1 byte payload, it is assumed that if UE has any data to transmit that will be on AM DRB).
NOTE 5: Applicable only when MCS index table 5.1.3.1-1 or 6.1.4.1-1 is configured to be used for UL grants (e.g. in case of mcs-Table = qam256, a different $I_{MCS}$ value needs to be defined)

### 7.1.2.4 Data scheduling

As according to TS 38.508-1[5] the SSB periodicity is set to 20ms, TTCN configures the SS to broadcast the SSB burst in half-frame 0 of frames with even SFN.

For scheduling of DL data or UL Grant, when timing information is explicit, the timing provided by TTCN corresponds to the time at which the SS shall transmit to the UE the PDCCH carrying the DCI message. The data scheduling applied by TTCN is specified in Tables 7.1.2.4-1 to 7.1.2.4-4.

**Table 7.1.2.4-1: Data scheduling for FR1: FDD, SCS=15kHz**

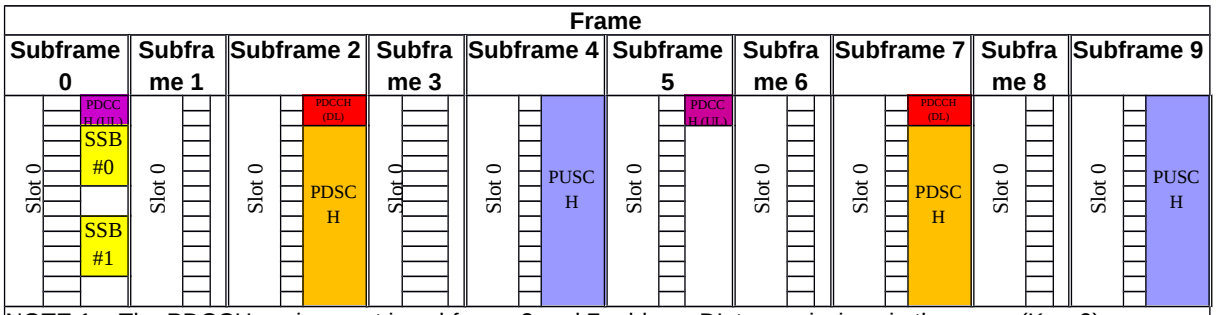


NOTE 1: The PDCCH assignment in subframe 2 and 7 address DL transmissions in the same ($K_0$ = 0).
NOTE 2: The UL grants in subframe 0 and 5 address UL transmissions in subframe 4 and 9 respectively ($K_2$ = 4).

**Table 7.1.2.4-2: Data scheduling for FR1: TDD, SCS=15kHz**

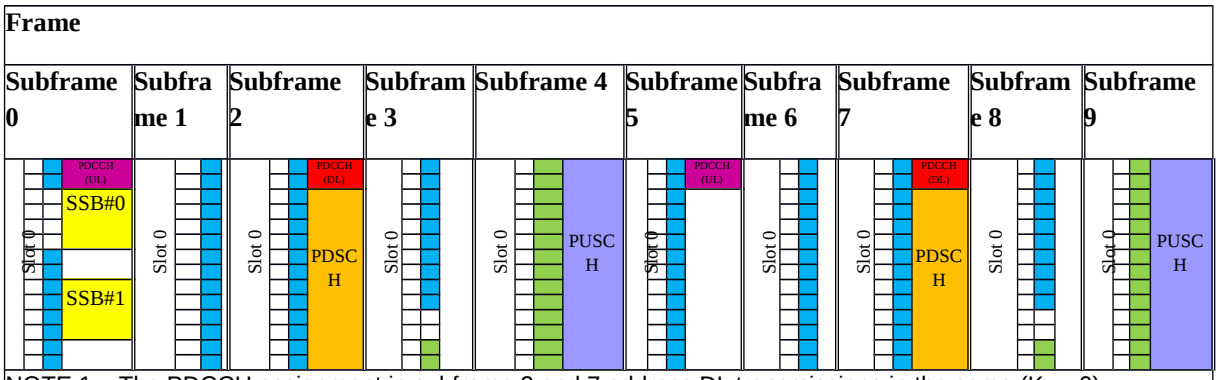


NOTE 1: The PDCCH assignment in subframe 2 and 7 address DL transmissions in the same ($K_0$ = 0).
NOTE 2: The UL grants in subframe 0 and 5 address UL transmissions in subframe 4 and 9 respectively ($K_2$ = 4).

**Table 7.1.2.4-3: Data scheduling for FR1: TDD, SCS=30kHz**

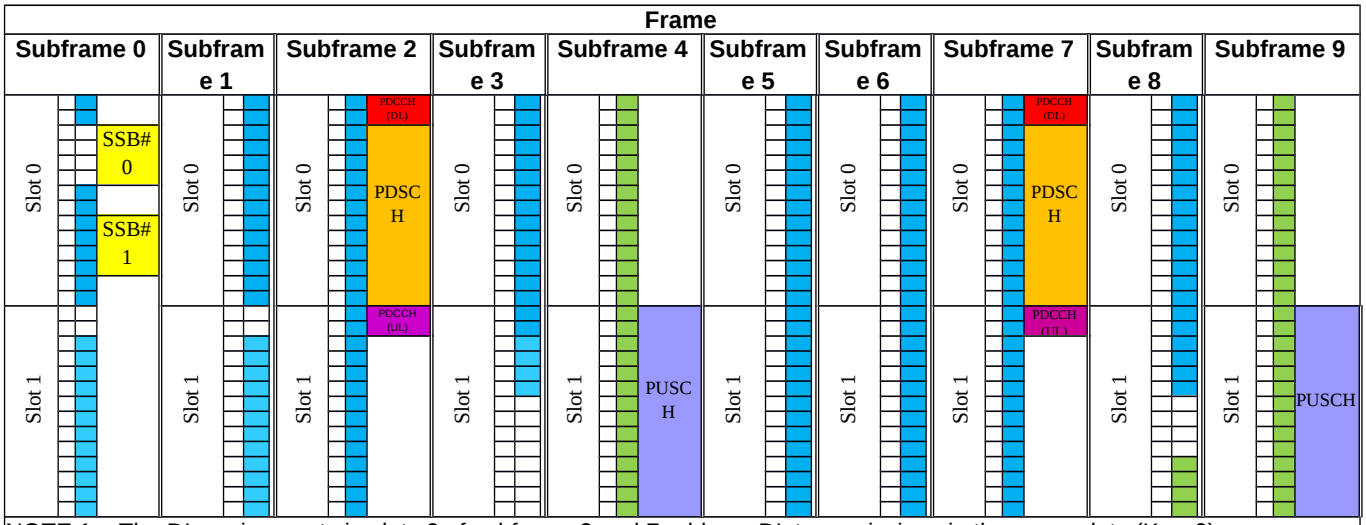


NOTE 1: The DL assignments in slots 0 of subframe 2 and 7 address DL transmissions in the same slots ($K_0$ = 0).
NOTE 2: The UL grants in slots 1 of subframe 2 and 7 address UL transmissions in slot 1 of subframe 4 and 9 respectively ($K_2$ = 4).

**Table 7.1.2.4-4: Data scheduling for FR2**

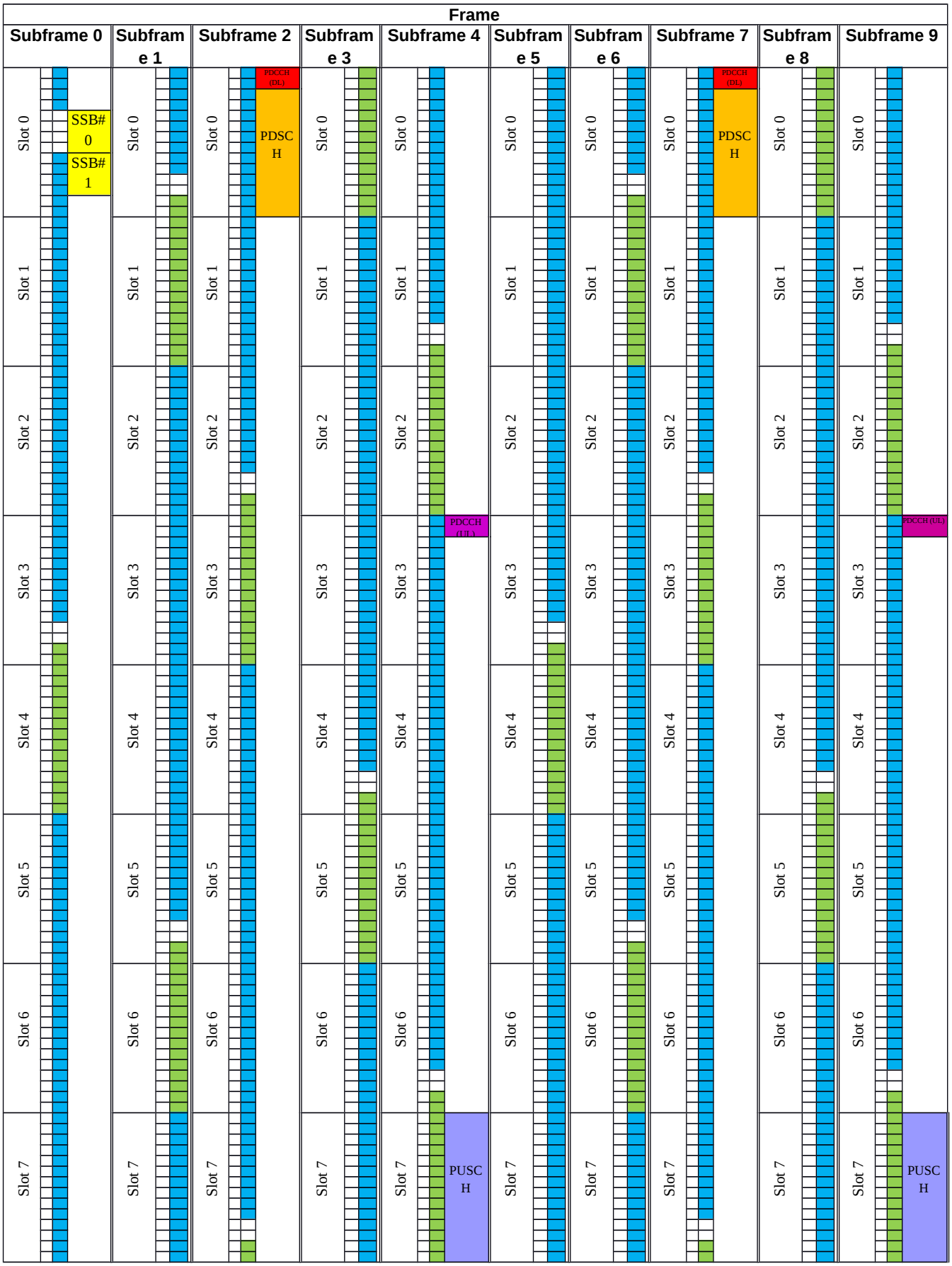

| |
|---|
| NOTE 1: The DL assignments in slots 0 of subframe 2 and 7 address DL transmissions in the same slots ($K_0$ = 0). |
| NOTE 2: The UL grants in slots 3 of subframe 4 and 9 address UL transmissions in slot 7 of the same subframe ($K_2$ = 4). |

#### 7.1.2.5 Noise generator

Several test cases require one or several NR cells to be subject to noise interference at a well-defined level. To achieve this, a Virtual Noise Generator (VNG) is modelled, located in the SS and controlled by TTCN.

A VNG instance has a one-to-one relation with an NR cell instance and therefore operates on the same frequency as the operating frequency of the associated NR cell. Default configuration of VNG models AWGN transmission across the whole carrier bandwidth and in every time slot. The test model allows varying the power level of the AWGN referred to as a *CellNocLevel* and measured in dBm/SCS.

The NR cell shall be configured before the associated VNG instance is configured. A VNG instance is first configured with noise source being “off”, and subsequently activated to a specified *CellNocLevel*. VNG instance deactivation stops the noise generation.

### 7.1.3 System information

TTCN provides the MIB message to the SS as a structured ASN.1 type using a control ASP (NR_SYSTEM_CTRL_REQ). The SS shall:

- set the *systemFrameNumber* in the MIB to the 6 MSBs of the current SFN. A dummy value is provided by TTCN. The SS shall convey the 4 LSBs of the current SFN in the PBCH transport block. The SS shall fulfil current SFN mod 80 = 0.
- encode the MIB ASN.1 message as specified in Table 8.1-1.
- transmit the encoded MIB message periodically as specified in TS 38.331 [16]. For each transmission, the SS shall update *systemFrameNumber* value as specified above.

### 7.1.4 Cell(s) handling

#### 7.1.4.1 Multi-cells environment

The same principles and rules are applied as according to clause 7.4.5 of TS 36.523-3 [12] to both E-UTRA and NR cells.

#### 7.1.4.2 Cell power change

The same principles and rules are applied as according to clause 7.4.2 of TS 36.523-3 [12].

### 7.1.5 Timing aspects

#### 7.1.5.1 SS time

The SS shall provide one system time common across all RATs and cells being configured in a test case. The timing of each configured cell is specified as an offset to this common system time.

#### 7.1.5.2 Cell(s) timing

The timing of E-UTRA cells is specified in TS 36.523-3 [12] subclause 7.4.3.1.

The DL timing of each NR cell is specified in Table 7.1.5.2-1.

**Table 7.1.5.2-1: DL timing parameters of simulated NR cells**

| NR cell Id | H-SFN-offset (note1) | SFN-offset for FDD (note2) | SFN-offset for TDD (note2) | Tcell (note3) | Tc-offset (note4) |
|---|---|---|---|---|---|
| NR Cell 1 | 0 | 0 | 0 | 0 | 0 |
| NR Cell 2 | 0 | 124 | 0 | 0 | 0 |
| NR Cell 3 | 0 | 257 | 257 | 0 | 0 |
| NR Cell 4 | 0 | 1000 | 0 | 0 | 0 |
| NR Cell 6 | 0 | 656 | 656 | 0 | 0 |
| NR Cell 10 | 0 | 129 | 129 | 0 | 0 |
| NR Cell 11 | 0 | 956 | 0 | 0 | 0 |
| NR Cell 12 | 0 | 1015 | 257 | 0 | 0 |
| NR Cell 13 | 0 | 890 | 656 | 0 | 0 |
| NR Cell 14 | 0 | 680 | 680 | 0 | 0 |
| NR Cell 23 | 0 | 383 | 257 | 0 | 0 |
| NR Cell 28 | 0 | 890 | 890 | 0 | 0 |
| NR Cell 29 | 0 | 680 | 890 | 0 | 0 |
| NR Cell 30 | 0 | 1015 | 129 | 0 | 0 |
| NR Cell 31 | 0 | 53 | 129 | 0 | 0 |

NOTE1: H-SFN-offset corresponds to the offset applied on H-SFN as defined for E-UTRA. It shall be set to 0 for an NR cell.
NOTE2: SFN-offset corresponds to the offset applied on system frame number (0 .. 1023).
NOTE3: Tcell corresponds to the timing offset in $T_s$. $T_s$ = 1/(15000 * 2048) as for E-UTRA.
NOTE4: Tc-offset corresponds to the timing offset in $T_c$. $\kappa = T_s/T_c = 64$ with $T_c$ = 1/(480000 * 4096). See TS 38.211 [19] subclause 4.1 and TS 36.211 [23] subclause 4).

The UL timing of each NR cell is configured as an offset (timing advance) to its DL timing. By default, the timing advance is initialised to 0 (unless specifically specified otherwise in the test case prose).

In test cases involving configuration of SCell(s), the H-SFN-offset / SFN-offset / Tcell / Tc-offset of SCell(s) are set to the same values as that of associated PCell(s).

In test cases involving NR-DC configuration, the H-SFN-offset / SFN-offset / Tcell / Tc-offset of PSCell(s) are set to the same values as that of associated PCell(s).

# 7.2 EN-DC

## 7.2.1 Introduction

Subclause 7.2 specifies test methods and design considerations that are specific to EN-DC.

## 7.2.2 Physical layer aspects

### 7.2.2.1 Search spaces and DCI

For EN-DC test cases, TTCN provides the DCI configuration only for the following PDCCH search spaces on the active DL BWP:

- Type1-PDCCH common search space: used for the Random Access procedure on the NR cell, and
- UE specific search space (UL and DL): used for data exchange in RRC_CONNECTED state on the NR cell.

- For the default NR cell operation, TTCN configures DCI formats 0_1 and 1_1 in the SS.

## 7.2.3 System information

For EN-DC only MIB is configured and broadcast. SIB1 (RMSI) and Other SI are not configured.

## 7.2.4 Bearers

From a 3GPP network perspective, each bearer (MCG, SCG and split bearer) can be terminated either in MN or in SN.

From a EN-DC Test Model and PTC architecture perspective however, there is no dependency between the PTC on which the NR PDCP of a bearer is configured and the type of bearer (MN terminated or SN terminated), e.g. an SCG bearer may have its NR PDCP configured on the NR PTC and act as a MN terminated bearer.

## 7.2.5 Random Access procedure

In EN-DC, when *reconfigurationWithSync* is indicated by RRC signalling, the UE performs a Random Access procedure, which is either contention free (CFRA) or contention based (CBRA) with C-RNTI based contention resolution. This is distinguished by whether or not *RACH-ConfigDedicated* is provided in the *reconfigurationWithSync* field of *CellGroupConfig*.

TTCN configures the SS accordingly, and in case of CBRA with C-RNTI based contention resolution, the UE gets a temporary C-RNTI being different than the C-RNTI the UE has got already and the UE gets an UL grant as according to Table 7.1.2.3.3-1.

## 7.2.6 PSCell change

### 7.2.6.1 Sequence of EN-DC NR inter-cell PSCell change

In general, the NR inter-cell PSCell change is done without activation time, i.e. the timing information for configuration of the SS and sending of the *RRCConnectionReconfiguration* is ‘Now'.

1. NR Target Cell: Configuration of SRB3 (if necessary) and DRBs
2. Transfer of the PDCP Count for DRBs and SRB3 (if necessary) from NR source to NR target cell:
   a) NR Source Cell: Get PDCP COUNT.
   b) NR Target Cell: Set PDCP COUNT.

NOTE 1: No further sending/receiving of DRB data before the PSCell change is done.

NOTE 2: For AM DRBs the PDCP count is maintained. For SRB3 (if applied) and UM DRBs, the PDCP count is maintained or reset depending on the *RRCConnectionReconfiguration* message content.

3. NR Target Cell: Inform the SS about the PSCell change and about the source cell id.
4. NR Target Cell: Configure RACH procedure either dedicated or C-RNTI based.

NOTE 3: The FollowOnFlag is set to true in the ASP reconfiguring C-RNTI.

5. NR Target Cell: Activate security.
6. NR Target Cell: Configure UL grant configuration ("OnSR", default grant).

NOTE 4: Unless explicitly specified UL grant configuration keeps configured as per default at the NR source cell.

7. E-UTRA Cell: Send *RRCConnectionReconfiguration*.
8. E-UTRA Cell: Receive *RRCConnectionReconfigurationComplete*.
9. NR Target Cell: Inform the SS about completion of the PSCell change (e.g. to trigger PDCP STATUS REPORT PDU).
10. NR Source Cell: Release SRB3 (if necessary) and DRBs.

#### 7.2.6.2 Sequence of EN-DC NR intra-cell PSCell change

For EN-DC NR intra-cell PSCell change dedicated timing information is used: the sequence starts at time T with sending of the *RRCConnectionReconfiguration*. T is set to 300 ms in advance of the handover.

1. NR Cell before T: Get PDCP count for DRBs and SRB3 (if applied).
2. E-UTRA Cell at T: Send *RRCConnectionReconfiguration*.
3. NR Cell at T: Release SRB3 (if necessary) and DRBs.
4. NR Cell at T: Configure RACH procedure either dedicated or C-RNTI based.

NOTE 1: The FollowOnFlag is set to true in the ASPs reconfiguring the RadioBearerList (step 3) and C-RNTI (step 4).

5. NR Cell at T + 5ms: (Re-)configure SRB3 (if necessary) and DRBs.
6. NR Cell at T + 5ms: Restore the PDCP counts

NOTE 2: For AM DRBs the PDCP count is maintained. For SRB3 (if applied) and UM DRBs, the PDCP count is maintained or reset depending on the *RRCConnectionReconfiguration* message content.

7. NR Cell at T + 5ms: Re-establish security.
8. E-UTRA Cell (after step 2): Receive *RRCConnectionReconfigurationComplete*.
9. Void

#### 7.2.6.3 UL grants used in RA procedure during EN-DC NR PSCell change

An UL grant is assigned to the UE by the RAR and in case of CBRA with C-RNTI based contention resolution, another UL grant, as initial grant, is assigned for contention resolution. The default Random Access procedure specified in clause 7.2.5 is applied.

#### 7.2.6.4 Sequence of EN-DC NR CA inter-cell PSCell change

This procedure is applicable when there are more than one CC in NR before and after the PSCell change.

In general, the NR CA inter-cell PSCell change is done without activation time, i.e. the timing information for configuration of the SS and sending of the *RRCConnectionReconfiguration* is ‘Now'.

1. NR Target PSCell: Configuration of SRB3 (if necessary) and DRBs
2. Transfer of the PDCP Count for DRBs and SRB3 (if necessary) from NR source PSCell to NR target PSCell:
   a) NR Source PSCell: Get PDCP COUNT.
   b) NR Target PSCell: Set PDCP COUNT.

NOTE 1: No further sending/receiving of DRB data before the PSCell change is done.

NOTE 2: For AM DRBs the PDCP count is maintained. For SRB3 (if applied) and UM DRBs, the PDCP count is maintained or reset depending on the *RRCConnectionReconfiguration* message content.

3. NR Target PSCell: Inform the SS about the PSCell change and about the source cell id.

4. NR Target PSCell: Configure RACH procedure either dedicated or C-RNTI based.

NOTE 3: The FollowOnFlag is set to true in the ASP reconfiguring C-RNTI.

5. NR Target PSCell: Activate security.

6. NR Target PSCell: Configure UL grant configuration ("OnSR", default grant).

NOTE 4: Unless explicitly specified UL grant configuration keeps configured as per default at the NR source PSCell.

7. NR Target PSCell: Configure Target PSCell as PSCell.

NOTE 5: The FollowOnFlag is set to true in the ASP reconfiguring PSCell.

8. NR Target SCell: Configure Target SCell as SCell with new PSCell association.

9. E-UTRA Cell: Send *RRCConnectionReconfiguration*.

10. E-UTRA Cell: Receive *RRCConnectionReconfigurationComplete*.

11. NR Target PSCell: Inform the SS about completion of the PSCell change (e.g. to trigger PDCP STATUS REPORT PDU).

12. NR Source PSCell: If source PSCell is not the same as target SCell, Release SRB3 (if necessary) and DRBs, reconfigure the cell as a normal cell.

13. NR Source SCell: If source SCell is not the same as target SCell or target PSCell, reconfigure the cell as a normal cell.

NOTE 6: The FollowOnFlag is set to true in the ASP reconfiguring PSCell.

# 7.3 NR/5GC

## 7.3.1 Introduction

Subclause 7.3 specifies test methods and design considerations that are specific to NR/5GC.

## 7.3.2 Physical layer aspects

## 7.3.3 System information

### 7.3.3.1 General SS requirements

TTCN provides the complete system information and scheduling information to the SS as a structured ASN.1 type using a single control ASP (NR_SYSTEM_CTRL_REQ). The following rules apply:

- The system information is sent to SS using the asn.1types. The SS shall encode each SI message as specified in Table 8.1-1 and add the necessary padding bits as specified in TS 38.331 [16], clause 8.5.

- The SS shall start scheduling all system information from the same SFN.

- The scheduling information sent to SS is the same as the scheduling information sent to the UE. For each SI message, the slotOffset list in NR_SYSTEM_CTRL_REQ indicates the exact point in time in the SI-window at which SS shall transmit of the related SI to the UE.

### 7.3.3.2 Scheduling information

The maximum number of resource blocks as defined in table 7.3.3.2-1 are used to broadcast the system information.

**Table 7.3.3.2-1: Maximum number of resource blocks**

| | **Maximum number of resource blocks assigned** | **Number of symbols assigned** |
|---|---|---|
| SIB1 | 7 | 12 |
| for all SIs | 7 | 12 |

The slot offset values defined in Table 7.3.3.2-1A are used for all SI messages with their respective SI-window.

**Table 7.3.3.2-1A: SubframeOffset values**

| **Configuration** | **subframeOffset list** |
|---|---|
| FR1 FDD & TDD SCS=15kHz | {5, 6, 15, 16} |
| FR1 TDD SCS=30kHz | {5, 6} |
| FR2 TDD SCS=120kHz | {5} |

All System Information messages are sent only once within the SI-window and redundancy version 0 is selected.

SIB1 is broadcasted in slot#1 in frames with even SFN.

Tables 7.3.3.2-2 to 7.3.3.2-4 give the SFN's and subframe numbers in which the MIB, SIB1 and other SIs are actually scheduled as per default parameters for si-WindowLength s80 for FR1 and s160 for FR2, periodicity for SI are defined in TS 38.508-1 [5].

**Table 7.3.3.2-2: MIB, SIB1 and SI scheduling for FR1: FDD and TDD, SCS=15kHz**

| SFN | Frame | | | | | | | | | | | | | | | | | | | |
|---|---|---|---|---|---|---|---|---|---|---|---|---|---|---|---|---|---|---|---|---|
| 0 | Subframe 0 | | Subframe 1 | | Subframe 2 | | Subframe 3 | | Subframe 4 | | Subframe 5 | | Subframe 6 | | Subframe 7 | | Subframe 8 | | Subframe 9 | |
| | SIO | MIB | SIO | SIB1 | SIO | | SIO | | SIO | | SIO | SI1 | SIO | SI1 | SIO | | SIO | | SIO | |
| 1 | SIO | | SIO | | SIO | | SIO | | SIO | | SIO | SI1 | SIO | SI1 | SIO | | SIO | | SIO | |
| 2 | SIO | MIB | SIO | SIB1 | SIO | | SIO | | SIO | | SIO | | SIO | | SIO | | SIO | | SIO | |
| 3 | SIO | | SIO | | SIO | | SIO | | SIO | | SIO | | SIO | | SIO | | SIO | | SIO | |
| 4 | SIO | MIB | SIO | SIB1 | SIO | | SIO | | SIO | | SIO | | SIO | | SIO | | SIO | | SIO | |
| 5 | SIO | | SIO | | SIO | | SIO | | SIO | | SIO | | SIO | | SIO | | SIO | | SIO | |
| 6 | SIO | MIB | SIO | SIB1 | SIO | | SIO | | SIO | | SIO | | SIO | | SIO | | SIO | | SIO | |
| 7 | SIO | | SIO | | SIO | | SIO | | SIO | | SIO | | SIO | | SIO | | SIO | | SIO | |
| 8 | SIO | MIB | SIO | SIB1 | SIO | | SIO | | SIO | | SIO | SI2 | SIO | SI2 | SIO | | SIO | | SIO | |
| 9 | SIO | | SIO | | SIO | | SIO | | SIO | | SIO | SI2 | SIO | SI2 | SIO | | SIO | | SIO | |
| 10 | SIO | MIB | SIO | SIB1 | SIO | | SIO | | SIO | | SIO | | SIO | | SIO | | SIO | | SIO | |
| 11 | SIO | | SIO | | SIO | | SIO | | SIO | | SIO | | SIO | | SIO | | SIO | | SIO | |
| 12 | SIO | MIB | SIO | SIB1 | SIO | | SIO | | SIO | | SIO | | SIO | | SIO | | SIO | | SIO | |
| 13 | SIO | | SIO | | SIO | | SIO | | SIO | | SIO | | SIO | | SIO | | SIO | | SIO | |
| 14 | SIO | MIB | SIO | SIB1 | SIO | | SIO | | SIO | | SIO | | SIO | | SIO | | SIO | | SIO | |
| 15 | SIO | | SIO | | SIO | | SIO | | SIO | | SIO | | SIO | | SIO | | SIO | | SIO | |
| 16 | SIO | MIB | SIO | SIB1 | SIO | | SIO | | SIO | | SIO | SI3 | SIO | SI3 | SIO | | SIO | | SIO | |
| 17 | SIO | | SIO | | SIO | | SIO | | SIO | | SIO | SI3 | SIO | SI3 | SIO | | SIO | | SIO | |
| 18 | SIO | MIB | SIO | SIB1 | SIO | | SIO | | SIO | | SIO | | SIO | | SIO | | SIO | | SIO | |
| 19 | SIO | | SIO | | SIO | | SIO | | SIO | | SIO | | SIO | | SIO | | SIO | | SIO | |
| 20 | SIO | MIB | SIO | SIB1 | SIO | | SIO | | SIO | | SIO | | SIO | | SIO | | SIO | | SIO | |
| 21 | SIO | | SIO | | SIO | | SIO | | SIO | | SIO | | SIO | | SIO | | SIO | | SIO | |
| 22 | SIO | MIB | SIO | SIB1 | SIO | | SIO | | SIO | | SIO | | SIO | | SIO | | SIO | | SIO | |
| 23 | SIO | | SIO | | SIO | | SIO | | SIO | | SIO | | SIO | | SIO | | SIO | | SIO | |
| 24 | SIO | MIB | SIO | SIB1 | SIO | | SIO | | SIO | | SIO | SI4 | SIO | SI4 | SIO | | SIO | | SIO | |
| 25 | SIO | | SIO | | SIO | | SIO | | SIO | | SIO | SI4 | SIO | SI4 | SIO | | SIO | | SIO | |

**Table 7.3.3.2-3: MIB, SIB1 and SI scheduling for FR1 TDD, SCS=30kHz**

| SFN | Frame | | | | | | | | | |
|---|---|---|---|---|---|---|---|---|---|---|
| | Subframe 0 | Subframe 1 | Subframe 2 | Subframe 3 | Subframe 4 | Subframe 5 | Subframe 6 | Subframe 7 | Subframe 8 | Subframe 9 |
| 0 | SI0 | SI0 | SI0 | SI0 | SI0 | SI0 | SI0 | SI0 | SI0 | SI0 |
| | MIB | | | SI1 | | | | | | |
| | SI1 | SI0 | SI0 | SI0 | SI0 | SI1 | SI1 | SI1 | SI1 | SI1 |
| | SIB1 | | SI1 | | | | | | | |
| 1 | SI1 | SI1 | SI1 | SI1 | SI1 | SI1 | SI1 | SI1 | SI1 | SI1 |
| | SI1 | SI1 | SI1 | SI1 | SI1 | SI1 | SI1 | SI1 | SI1 | SI1 |
| 2 | SI1 | SI0 | SI0 | SI0 | SI0 | SI1 | SI1 | SI1 | SI1 | SI1 |
| | MIB | | | | | | | | | |
| | SI1 | SI0 | SI0 | SI0 | SI0 | SI1 | SI1 | SI1 | SI1 | SI1 |
| | SIB1 | | | | | | | | | |
| 3 | SI1 | SI1 | SI1 | SI1 | SI1 | SI1 | SI1 | SI1 | SI1 | SI1 |
| | SI1 | SI1 | SI1 | SI1 | SI1 | SI1 | SI1 | SI1 | SI1 | SI1 |
| 4 | SI1 | SI0 | SI0 | SI0 | SI0 | SI1 | SI1 | SI1 | SI1 | SI1 |
| | MIB | | | SI2 | | | | | | |
| | SI1 | SI0 | SI0 | SI0 | SI0 | SI1 | SI1 | SI1 | SI1 | SI1 |
| | SIB1 | | SI2 | | | | | | | |
| 5 | SI1 | SI1 | SI1 | SI1 | SI1 | SI1 | SI1 | SI1 | SI1 | SI1 |
| | SI1 | SI1 | SI1 | SI1 | SI1 | SI1 | SI1 | SI1 | SI1 | SI1 |
| 6 | SI1 | SI0 | SI0 | SI0 | SI0 | SI1 | SI1 | SI1 | SI1 | SI1 |
| | MIB | | | | | | | | | |
| | SI1 | SI0 | SI0 | SI0 | SI0 | SI1 | SI1 | SI1 | SI1 | SI1 |
| | SIB1 | | | | | | | | | |
| 7 | SI1 | SI1 | SI1 | SI1 | SI1 | SI1 | SI1 | SI1 | SI1 | SI1 |
| | SI1 | SI1 | SI1 | SI1 | SI1 | SI1 | SI1 | SI1 | SI1 | SI1 |
| 8 | SI1 | SI0 | SI0 | SI0 | SI0 | SI1 | SI1 | SI1 | SI1 | SI1 |
| | MIB | | | SI3 | | | | | | |
| | SI1 | SI0 | SI0 | SI0 | SI0 | SI1 | SI1 | SI1 | SI1 | SI1 |
| | SIB1 | | SI3 | | | | | | | |
| 9 | SI1 | SI1 | SI1 | SI1 | SI1 | SI1 | SI1 | SI1 | SI1 | SI1 |
| | SI1 | SI1 | SI1 | SI1 | SI1 | SI1 | SI1 | SI1 | SI1 | SI1 |
| 10 | SI1 | SI0 | SI0 | SI0 | SI0 | SI1 | SI1 | SI1 | SI1 | SI1 |
| | MIB | | | | | | | | | |
| | SI1 | SI0 | SI0 | SI0 | SI0 | SI1 | SI1 | SI1 | SI1 | SI1 |
| | SIB1 | | | | | | | | | |
| 11 | SI1 | SI1 | SI1 | SI1 | SI1 | SI1 | SI1 | SI1 | SI1 | SI1 |
| | SI1 | SI1 | SI1 | SI1 | SI1 | SI1 | SI1 | SI1 | SI1 | SI1 |
| 12 | SI1 | SI0 | SI0 | SI0 | SI0 | SI1 | SI1 | SI1 | SI1 | SI1 |
| | MIB | | | SI4 | | | | | | |
| | SI1 | SI0 | SI0 | SI0 | SI0 | SI1 | SI1 | SI1 | SI1 | SI1 |
| | SIB1 | | SI4 | | | | | | | |
| 13 | SI1 | SI1 | SI1 | SI1 | SI1 | SI1 | SI1 | SI1 | SI1 | SI1 |
| | SI1 | SI1 | SI1 | SI1 | SI1 | SI1 | SI1 | SI1 | SI1 | SI1 |
| 14 | SI1 | SI0 | SI0 | SI0 | SI0 | SI1 | SI1 | SI1 | SI1 | SI1 |
| | MIB | | | | | | | | | |
| | SI1 | SI0 | SI0 | SI0 | SI0 | SI1 | SI1 | SI1 | SI1 | SI1 |
| | SIB1 | | | | | | | | | |
| 15 | SI1 | SI1 | SI1 | SI1 | SI1 | SI1 | SI1 | SI1 | SI1 | SI1 |
| | SI1 | SI1 | SI1 | SI1 | SI1 | SI1 | SI1 | SI1 | SI1 | SI1 |

**Table 7.3.3.2-4: MIB, SIB1 and SI scheduling for FR2: TDD, SCS=120kHz**

| SFN | Frame | | | | | | | | | |
|---|---|---|---|---|---|---|---|---|---|---|
| | Subframe 0 | Subframe 1 | Subframe 2 | Subframe 3 | Subframe 4 | Subframe 5 | Subframe 6 | Subframe 7 | Subframe 8 | Subframe 9 |
| 0 | SI0 | SI0 | SI0 | SI0 | SI0 | SI0 | SI0 | SI0 | SI0 | SI0 |
| | SI1 MIB | SI1 | SI1 | SI1 | SI1 | SI1 | SI1 | SI1 | SI1 | SI1 |
| | SI2 SIB1 | SI2 | SI2 | SI2 | SI2 | SI2 | SI2 | SI2 | SI2 | SI2 |
| | SI3 | SI3 | SI3 | SI3 | SI3 | SI3 | SI3 | SI3 | SI3 | SI3 |
| | SI4 | SI4 | SI4 | SI4 | SI4 | SI4 | SI4 | SI4 | SI4 | SI4 |
| | SI5 SI1 | SI5 | SI5 | SI5 | SI5 | SI5 | SI5 | SI5 | SI5 | SI5 |
| | SI6 | SI6 | SI6 | SI6 | SI6 | SI6 | SI6 | SI6 | SI6 | SI6 |
| | SI7 | SI7 | SI7 | SI7 | SI7 | SI7 | SI7 | SI7 | SI7 | SI7 |
| 1 | SI0 | SI0 | SI0 | SI0 | SI0 | SI0 | SI0 | SI0 | SI0 | SI0 |
| | SI1 | SI1 | SI1 | SI1 | SI1 | SI1 | SI1 | SI1 | SI1 | SI1 |
| | SI2 | SI2 | SI2 | SI2 | SI2 | SI2 | SI2 | SI2 | SI2 | SI2 |
| | SI3 | SI3 | SI3 | SI3 | SI3 | SI3 | SI3 | SI3 | SI3 | SI3 |
| | SI4 | SI4 | SI4 | SI4 | SI4 | SI4 | SI4 | SI4 | SI4 | SI4 |
| | SI5 | SI5 | SI5 | SI5 | SI5 | SI5 | SI5 | SI5 | SI5 | SI5 |
| | SI6 | SI6 | SI6 | SI6 | SI6 | SI6 | SI6 | SI6 | SI6 | SI6 |
| | SI7 | SI7 | SI7 | SI7 | SI7 | SI7 | SI7 | SI7 | SI7 | SI7 |
| 2 | SI0 MIB | SI0 | SI0 | SI0 | SI0 | SI0 | SI0 | SI0 | SI0 | SI0 |
| | SI1 SIB1 | SI1 | SI1 | SI1 | SI1 | SI1 | SI1 | SI1 | SI1 | SI1 |
| | SI2 | SI2 | SI2 | SI2 | SI2 | SI2 | SI2 | SI2 | SI2 | SI2 |
| | SI3 | SI3 | SI3 | SI3 | SI3 | SI3 | SI3 | SI3 | SI3 | SI3 |
| | SI4 | SI4 | SI4 | SI4 | SI4 | SI4 | SI4 | SI4 | SI4 | SI4 |
| | SI5 SI2 | SI5 | SI5 | SI5 | SI5 | SI5 | SI5 | SI5 | SI5 | SI5 |
| | SI6 | SI6 | SI6 | SI6 | SI6 | SI6 | SI6 | SI6 | SI6 | SI6 |
| | SI7 | SI7 | SI7 | SI7 | SI7 | SI7 | SI7 | SI7 | SI7 | SI7 |
| 3 | SI0 | SI0 | SI0 | SI0 | SI0 | SI0 | SI0 | SI0 | SI0 | SI0 |
| | SI1 | SI1 | SI1 | SI1 | SI1 | SI1 | SI1 | SI1 | SI1 | SI1 |
| | SI2 | SI2 | SI2 | SI2 | SI2 | SI2 | SI2 | SI2 | SI2 | SI2 |
| | SI3 | SI3 | SI3 | SI3 | SI3 | SI3 | SI3 | SI3 | SI3 | SI3 |
| | SI4 | SI4 | SI4 | SI4 | SI4 | SI4 | SI4 | SI4 | SI4 | SI4 |
| | SI5 | SI5 | SI5 | SI5 | SI5 | SI5 | SI5 | SI5 | SI5 | SI5 |
| | SI6 | SI6 | SI6 | SI6 | SI6 | SI6 | SI6 | SI6 | SI6 | SI6 |
| | SI7 | SI7 | SI7 | SI7 | SI7 | SI7 | SI7 | SI7 | SI7 | SI7 |
| 4 | SI0 | SI0 | SI0 | SI0 | SI0 | SI0 | SI0 | SI0 | SI0 | SI0 |
| | SI1 MIB | SI1 | SI1 | SI1 | SI1 | SI1 | SI1 | SI1 | SI1 | SI1 |
| | SI2 SIB1 | SI2 | SI2 | SI2 | SI2 | SI2 | SI2 | SI2 | SI2 | SI2 |
| | SI3 | SI3 | SI3 | SI3 | SI3 | SI3 | SI3 | SI3 | SI3 | SI3 |
| | SI4 | SI4 | SI4 | SI4 | SI4 | SI4 | SI4 | SI4 | SI4 | SI4 |
| | SI5 SI3 | SI5 | SI5 | SI5 | SI5 | SI5 | SI5 | SI5 | SI5 | SI5 |
| | SI6 | SI6 | SI6 | SI6 | SI6 | SI6 | SI6 | SI6 | SI6 | SI6 |
| | SI7 | SI7 | SI7 | SI7 | SI7 | SI7 | SI7 | SI7 | SI7 | SI7 |
| 5 | SI0 | SI0 | SI0 | SI0 | SI0 | SI0 | SI0 | SI0 | SI0 | SI0 |
| | SI1 | SI1 | SI1 | SI1 | SI1 | SI1 | SI1 | SI1 | SI1 | SI1 |
| | SI2 | SI2 | SI2 | SI2 | SI2 | SI2 | SI2 | SI2 | SI2 | SI2 |
| | SI3 | SI3 | SI3 | SI3 | SI3 | SI3 | SI3 | SI3 | SI3 | SI3 |
| | SI4 | SI4 | SI4 | SI4 | SI4 | SI4 | SI4 | SI4 | SI4 | SI4 |
| | SI5 | SI5 | SI5 | SI5 | SI5 | SI5 | SI5 | SI5 | SI5 | SI5 |
| | SI6 | SI6 | SI6 | SI6 | SI6 | SI6 | SI6 | SI6 | SI6 | SI6 |
| | SI7 | SI7 | SI7 | SI7 | SI7 | SI7 | SI7 | SI7 | SI7 | SI7 |
| 6 | SI0 MIB | SI0 | SI0 | SI0 | SI0 | SI0 | SI0 | SI0 | SI0 | SI0 |
| | SI1 SIB1 | SI1 | SI1 | SI1 | SI1 | SI1 | SI1 | SI1 | SI1 | SI1 |
| | SI2 | SI2 | SI2 | SI2 | SI2 | SI2 | SI2 | SI2 | SI2 | SI2 |
| | SI3 | SI3 | SI3 | SI3 | SI3 | SI3 | SI3 | SI3 | SI3 | SI3 |
| | SI4 | SI4 | SI4 | SI4 | SI4 | SI4 | SI4 | SI4 | SI4 | SI4 |
| | SI5 SI4 | SI5 | SI5 | SI5 | SI5 | SI5 | SI5 | SI5 | SI5 | SI5 |
| | SI6 | SI6 | SI6 | SI6 | SI6 | SI6 | SI6 | SI6 | SI6 | SI6 |
| | SI7 | SI7 | SI7 | SI7 | SI7 | SI7 | SI7 | SI7 | SI7 | SI7 |

#### 7.3.3.3 System information modification

For system information modification, the same rules as defined in clause 7.3.3.1 and 7.3.3.2 are applied.

The SFN for the start of modification period is calculated by TTCN. The modified system information and the calculated SFN are provided in the ASP NR_SYSTEM_CTRL_REQ. When the cell is switched off, 'activateNow' is used.

The updated SI other than ETWS and CMAS, is broadcasted in the modification period following the one where SI change indication is transmitted. The updated SI for ETWS and CMAS is broadcasted in the same modification period as the one where SI change indication is transmitted. Short message indications are transmitted as follows:

- When UE is in RRC_IDLE or in RRC_INACTIVE, a single Short Message indication is transmitted in UE paging occasions of the modification period. With the default values provided in TS 38.508-1[5], this results in 4 Short Messages transmitted by SS during the modification period.
- When UE is in RRC_CONNECTED, Short Message indications are transmitted in every paging occasions of each frame throughout the modification period. With the default values provided in TS 38.508-1[5], this results in 64*4*2 Short Messages transmitted by SS during the modification period.

#### 7.3.3.4 Request for on demand system information

In case PRACH preamble (Msg1) is used for indication of requested other SI:

- TTCN configures SS with the SI-RequestConfig as provided to UE in SIB1 and SS shall monitor these PRACH resources.
- TTCN configures SS to report PRACH preambles and to transmit Random Access Response (Msg2) as response to Msg1 but not to handle contention resolution.
- TTCN may reconfigure SS to stop broadcasting a specific SI from the start of a modification period and may reconfigure SS to restart broadcasting the SI from the start of a repetition period.

Editor's note: Timing to restart broadcasting SI depends on the timing of the test case prose. FFS

In case Msg3 is used for indication of requested other SI:

- TTCN configures the SS to transmit a Msg4 with Contention Resolution Identity upon receipt of *RRCSystemInfoRequest* (Msg3).
- TTCN may reconfigure SS to stop broadcasting a specific SI from the start of a modification period and may reconfigure SS to restart broadcasting the SI from the start of a repetition period.

Editor's note: Timing to restart broadcasting SI depends on the timing of the test case prose. FFS

### 7.3.4 Paging and Short Message

SS can be configured with a DCI including Short Messages. In that case, when SS is triggered to transmit a *Paging* message, the Short Message indication shall be included in the DCI.

SS can be triggered to transmit Short Messages alone, this is achieved in TTCN with the DciTrigger type. SS is triggered to send the *Paging* message or a Short Message indication at a calculated Paging Occasion provided in the activation time and optionally a list slot offsets when multiple paging occasions are applied. Discontinuous Reception (DRX) is applied for the transmission of a *Paging* message or a Short Message indication to the UE in the RRC_IDLE or RRC_INACTIVE states. The paging frame calculation is according to TS 38.304 [24] clause 7. The following default values are provided in TS 38.508-1[5]:

- defaultPagingCycle = 128

- Ns = one
- N = 64
- PF_Offset = 0

When these default values are applied, the Paging Frame calculation is:

- Paging Frame: SFN mod 128 =2*(UE_ID mod 64) so depending on UE_ID, the Paging Frame is set to 0,2,4,6, … 126 of the paging cycle.

When UE is in RRC_IDLE or RRC_INACTIVE and when PDCCH monitoring occasions with default association is applied, the Paging Occasion is set to:

- slot#2 of the Paging Frame when the cell is configured with SSB#1 or
- slot#1 of the Paging Frame when the cell is configured with SSB#0.

To notify system information modification when UE is in RRC_CONNECTED and when PDCCH monitoring occasions with default association is applied, the Paging Occasion is set to:

- slot#1 and slot#2 of the Paging Frame when the cell is configured with SSB#1 or
- slot#0 and slot#1 of the Paging Frame when the cell is configured with SSB#0.

## 7.3.5 RRC connection control

### 7.3.5.1 Early contention resolution

When the contention based RACH procedure is being executed (RRC connection establishment, RRC reconfiguration, RRC connection resume or RRC re-establishment), in general the UE Contention Resolution Identity MAC CE and the DL RRC PDU on DL CCCH (*RRCSetup*/*RRCReject*) or DL DCCH (*RRCResume/RRCReestablishment/RRCRelease*) are sent in one MAC PDU (RA Msg4). This is achieved by pre-configuring the SS (before the start of the RRC procedure) to send the encoded DL message and UE Contention Resolution Identity MAC CE in one MAC PDU.

There are cases however where it is necessary to send the DL CCCH or DL DCCH message separately from RA Msg4, this is implemented in TTCN using the test case attribute EarlyContentionResolution:

- RRC connection establishment: when *RRCSetup* message is part of the test purpose,
- RRC connection reject: when *RRCReject* message is part of the test purpose,
- RRC connection resume: when *RRCResume* or *RRCRelease* message is part of the test purpose,
- RRC connection re-establishment: when *RRCReestablishment* message is part of the test purpose
- Special cases: e.g. when no contention resolution shall be sent according to the test purpose.

### 7.3.5.2 RRC connection release sequence

According to TS 38.331 [19], clause 5.3.8.3, after reception of the *RRCRelease* message the UE may either wait 60 ms or for indication of acknowledgement from lower layer. After the *RRCRelease* message there are cases where the UE may immediately come up with an *RRCSetupRequest* message. This requires scheduled release of resources at the SS:

1. At T: Send *RRCRelease*, stop UL grants.
2. At T + 5ms: Release security.
3. At T + 10ms: Release DRX configuration at the SS.

4 At T + 15ms: Release measurement gap configuration at the SS.

5. At T + 55ms: Release SRBs and DRBs.

6. At T + 60ms: (Re-)configure SRBs.

7. Delay of 840ms (NOTE)

T is set to 300ms in advance of *RRCRelease*.

NOTE: The delay ensures that the UE is camping on the serving cell again to avoid side effects e.g. due to subsequent power level changes. It does not affect any sending of messages by the UE. The delay 840 ms is chosen to ensure the UE is re-camping on the cell and has read relevant system information (MIB, SIB1 and all other SIs).

### 7.3.5.3 Handover

#### 7.3.5.3.1 Sequence of intra-NR inter-cell handover

In general, the intra-NR inter-cell handover is done without activation time, i.e. the timing information for configuration of the SS and sending of the *RRCReconfiguration* is ‘Now'.

The sequence may be interrupted if other events need to be handled. E.g. when a Mobility procedure is performed in the target cell and there are procedures left to be executed on the source cell.

1. Target Cell: Configuration of DRBs

2. Transfer of the PDCP Count for AM DRBs and SRBs (if applied) from source to target cell:

   a) Source Cell: Get PDCP COUNT.

   b) Target Cell: Set PDCP COUNT.

NOTE 1: No further sending/receiving of DRB data before the HO is done.

NOTE 2: For AM DRBs the PDCP count is maintained, for UM DRBs the PDCP count is reset. For SRBs, the PDCP count is maintained or reset depending on the *RRCReconfiguration* message content.

3. Target Cell: Inform the SS about the HO and about the source cell id.

4. Target Cell: Configure RACH procedure either dedicated or C-RNTI based.

NOTE 3: The FollowOnFlag is set to true in the ASP reconfiguring C-RNTI.

5. Target Cell: Activate security.

6. Void

7. Source Cell: Stop periodic TA.

NOTE 4: Unless explicitly specified UL grant configuration keeps configured as per default at the source cell.

8. Target Cell: Configure UL grant configuration ("OnSR", periodic TA is not started).

9. Source Cell: Send *RRCReconfiguration*.

10. Target Cell: Receive *RRCReconfigurationComplete*.

11. Target Cell: Start periodic TA.

12. Target Cell: Inform the SS about completion of the HO (e.g. to trigger PDCP STATUS REPORT PDU).

13. Target Cell: Re-configure RACH procedure as for initial access.
14. Target Cell: Configure measurement gap (if configured in the source cell or as provided in the *RRCReconfiguration* message).
15. Source Cell: Reset SRBs and release DRBs.
16. Source Cell: Release MeasGapConfig configuration.

#### 7.3.5.3.2 Sequence of intra-NR intra-cell handover

For intra-NR intra-cell handover dedicated timing information is used: the sequence starts at time T with sending of the *RRCReconfiguration*. T is set to 300 ms in advance of the handover.

1. Before T: Get PDCP count for AM DRBs and SRBs (if applied).
2. At T: Send *RRCReconfiguration*.
3. At T + 5ms: Release SRBs and DRBs.
4. At T + 5ms: Configure RACH procedure either dedicated or C-RNTI based.

NOTE 1: Since the RACH procedure may require a new C-RNTI to be used it cannot be configured before sending out the *RRCReconfiguration*.

NOTE 2: The FollowOnFlag is set to true in the ASPs reconfiguring the RadioBearerList (step 3) and C-RNTI (step 4).

5. At T + 5ms: (Re-)configure measurement gap if provided in the *RRCReconfiguration* message.
6. At T + 10ms: (Re-) configure SRBs and DRBs.
7. At T + 10ms: Set PDCP COUNT for AM DRBs and SRBs (if applied).

NOTE 3: For AM DRBs the PDCP count is maintained while for UM DRBs the PDCP count is reset. For SRBs, the PDCP count is maintained or reset depending on the *RRCReconfiguration* message content.

8. At T + 10ms: Re-establish security, disable TA transmission.
9. (after step 7) Receive *RRCReconfigurationComplete*.
10. (after step 8) Re-configure RACH procedure as for initial access, enable TA transmissions.

NOTE 4: The FollowOnFlag is set to true in the ASP reconfiguring RACH.

#### 7.3.5.3.3 UL grants used in RA procedure during handover

An UL grant is assigned to the UE by the RAR and in case of CBRA with C-RNTI based contention resolution another UL grant, as initial grant, is assigned for contention resolution.

When UL data is pending, the UE will try to put as much data into given grants as possible, i.e. it will segment the user data and send it e.g. with the initial grant if possible. To avoid this segmentation of user data, the grant assigned by RAR and the initial grant during handover are set according to Table 7.1.2.3.3-1.

#### 7.3.5.3.4 Sequence of intra-NR inter-cell CA handover

This procedure is applicable when there are more than one CC before and after the handover.

The intra-NR inter-cell CA handover is done with activation time, i.e. the timing information for configuration of the SS and sending of the *RRCReconfiguration* is explicit. Time ‘T’ is set to 700 ms in advance of the handover, time T1 = T + 10 ms and time T2 = T +20 ms.

At Time T, steps 1-3:

1. Source PCell: Stop periodic TA.

NOTE 1: Unless explicitly specified UL grant configuration keeps configured as per default at the source cell.

2. Target PCell: Configure target PCell for no RACH response transmission.

3. Source PCell: Schedule the transmission of *RRCReconfiguration* message to UE requesting Handover to target PCell and SCell.

At time T1 if target PCell is the same as source SCell, else at time "Now", steps 4-6:

4. Target PCell: If target PCell is same as source SCell, configure SS for target PCell to be converted from a SCell to PCell.

5. Target PCell: Configuration of DRBs

6. Transfer of the PDCP Count for AM DRBs and SRBs (if applied) from source to target PCell:

   a) Source PCell: Get PDCP COUNT.

   b) Target PCell: Set PDCP COUNT.

NOTE 2: No further sending/receiving of DRB data before the HO is done.

NOTE 3: For AM DRBs the PDCP count is maintained, for UM DRBs the PDCP count is reset. For SRBs, the PDCP count is maintained or reset depending on the *RRCReconfiguration* message content.

At time T2, steps 7-12:

7. Target PCell: Inform the SS about the HO and about the source PCell id.

8. Target PCell: Configure RACH procedure either dedicated or C-RNTI based.

NOTE 4: The FollowOnFlag is set to true in the ASP reconfiguring C-RNTI.

9. Target PCell: Activate security.

10. Target PCell: Configure UL grant configuration ("OnSR", periodic TA is not started).

11. Target PCell: Configure Target PCell as PCell.

NOTE 5: The FollowOnFlag is set to true in the ASP reconfiguring PCell.

12. Target SCell: Configure Target SCell as SCell with new PCell association.

After time T2 (without activation time):

13. Target PCell: Receive *RRCReconfigurationComplete*.

14. Target PCell: Start periodic TA.

15. Target PCell: Inform the SS about completion of the HO (e.g. to trigger PDCP STATUS REPORT PDU).

16. Target PCell: Re-configure RACH procedure as for initial access.

17. Source PCell: If source PCell is not target SCell:

17.1 Reset SRBs and release DRBs.

17.2 Configure from PCell to normal cell.

18. Source SCell: If source SCell is neither target PCell nor target SCell:

18.1 Re-configure source SCell to normal cell and remove source SCell from the SCell list in the source PCell.

#### 7.3.5.4 RRC connection re-establishment

In general, the re-establishment is done without activation time, i.e. the timing information for configuration of the SS and sending of the *RRCReestablishment* is ‘Now'.

The Source Cell and Target cell can be the same cell.

1. Target Cell: Reconfigure DCCH/DTCH DCI on CSS and reconfigure RACH procedure contention-based with UE Contention Resolution Identity MAC CE and with a new C-RNTI.

NOTE 1: The FollowOnFlag is set to true in the ASP reconfiguring C-RNTI.

2. Target Cell: Receive *RRCReestablismentRequest*.

3. Source Cell: If the Source Cell is the same as the Target Cell:

   Reset SRBs and release DRBs.

   Stop periodic TA.

4. Target Cell: If the Source Cell is different from the Target Cell:

   Configure UL grant configuration ("OnSR").

5. Target Cell: Activate Security.

6. Target Cell: Send *RRCReestablishment*.

7. Target Cell: Receive *RRCReestablishmentComplete.*

8. Target Cell: Reconfigure DRBs and reconfigure UL DCCH/DTCH DCI on USS.

9. Target Cell: Send *RRCReconfiguration.*

10. Target Cell: Receive *RRCReconfigurationComplete.*

11. Target Cell: Reconfigure DL DCCH/DTCH DCI on USS.

NOTE 2: The FollowOnFlag is set to true in the ASP reconfiguring the target PCell.

12. Target Cell: Re-configure RACH procedure as for initial access, enable TA transmissions.

NOTE 3: The FollowOnFlag is set to true in the ASP reconfiguring the target PCell.

13. Source Cell: If the Source Cell is different from the Target Cell:

    Reset SRBs and release DRBs.

    Stop periodic UL grant and periodic TA.

### 7.3.5.5 NR-DC PSCell change

#### 7.3.5.5.1 Sequence of NR-DC inter-cell PSCell change

In general, the NR inter-cell PSCell change is done without activation time, i.e. the timing information for configuration of the SS and sending of the *RRCReconfiguration* is ‘Now'.

1. NR Target PSCell: Configuration of SRB3 (if necessary) and DRBs.
2. Transfer of the PDCP Count for DRBs and SRB3 (if necessary) from NR source to NR target PSCell:
   a) NR Source PSCell: Get PDCP COUNT.
   b) NR Target PSCell: Set PDCP COUNT.

NOTE 1: No further sending/receiving of DRB data before the PSCell change is done.

NOTE 2: For AM DRBs the PDCP count is maintained. For SRB3 (if applied) and UM DRBs, the PDCP count is maintained or reset depending on the *RRCReconfiguration* message content.

3. NR Target PSCell: Inform the SS about the PSCell change and about the source cell id.
4. NR Target PSCell: Configure RACH procedure either dedicated or C-RNTI based.

NOTE 3: The FollowOnFlag is set to true in the ASP reconfiguring C-RNTI.

5. NR Target PSCell: Activate security.
6. NR Target PSCell: Configure UL grant configuration ("OnSR", default grant).

NOTE 4: Unless explicitly specified UL grant configuration keeps configured as per default at the NR source PSCell.

7. NR PCell: Send *RRCReconfiguration*.
8. NR PCell: Receive *RRCReconfigurationComplete*.
9. NR Target PSCell: Inform the SS about completion of the PSCell change (e.g. to trigger PDCP STATUS REPORT PDU).
10. NR Source PSCell: Release SRB3 (if necessary) and DRBs.

## 7.3.6 Bearers

### 7.3.6.1 DRB Identity Management

If a UE is configured to establish more than one PDU session at switch on, the order in which they are requested by the UE cannot be guaranteed; and in fact may be different between successive instances of switching on in the same test case. In order to align NR/5GC with EN-DC and E-UTRA/EPC, TTCN allocates:

- *drb-Identity* 1 for the default DRB of the PDU session for IMS.
- *drb-Identity* 2 onwards for other DRB(s).

# 8 Other SS requirements with TTCN-3 impact

## 8.1 Codec requirements

The SS shall comply with the requirements specified in TS 36.523-3 [12] subclause 8.1. In addition, the SS shall also comply with the codec requirements specified in Table 8.1-1.

**Table 8.1-1: Codec requirements**

| Type definitions | Codec requirements | Encoding rule in TTCN-3 |
|---|---|---|
| NR ASN.1 types used for RRC signalling | shall comply to TS 38.331 [16] subclause 8.3 | UNALIGNED_PER_OctetAligned |
| EAP types | shall comply to Tabular Notated (see note) | EAP Types |
| NOTE: Tabular Notated is performed by concatenation of all the present fields in the TTCN-3 template. | | |

## 8.2 External function definitions

The SS shall implement the external functions specified in TS 36.523-3 [12] subclause 8.2.

The following external functions shall also be implemented by the SS.

| **TTCN-3 External Function** | | |
|---|---|---|
| **Name** | **fx_NG_NasIntegrityAlgorithm** | |
| **Description** | Apply integrity protection algorithm on a given octetstring | |
| **Parameters** | NAS PDU | octetstring according to TS 24.501 [26], clause 4.4.3.3 this shall include octet 7 to n of the security protected NAS message, i.e. the sequence number IE and the NAS message IE |
| | Integrity Algorithm | 4 bits as defined in TS 24.501 [26], clause 9.11.3.34 |
| | $KNAS_{int}$ | Integrity key |
| | NAS COUNT | as documented in TS 24.501 [26] |
| | BEARER Id | fix value of '00000'B for 3GPP access and '00001'B for non-3GPP access |
| | Direction | UL: 0<br>DL: 1<br>(acc. to TS 33.501 [25], clause D.3.1) |
| **Return Value** | Message Authentication Code (4 octets) | |

| **TTCN-3 External Function** | | |
|---|---|---|
| **Name** | **fx_NG_NasCiphering** | |
| **Description** | Apply ciphering on a given octetstring | |
| **Parameters** | NAS PDU | octetstring |
| | Ciphering Algorithm | 4 bits as defined in TS 24.501 [26], clause 9.11.3.34 |
| | $KNAS_{enc}$ | Ciphering Key |
| | NAS COUNT | as documented in TS 24.501 [26] |
| | BEARER Id | fix value of '00000'B for 3GPP access and '00001'B for non-3GPP access |
| **Return Value** | ciphered octet string | |

| TTCN-3 External Function | | |
|---|---|---|
| **Name** | **fx_NG_NasDeciphering** | |
| **Description** | Apply deciphering on a given octetstring | |
| **Parameters** | ciphered NAS PDU | octetstring |
| | Ciphering Algorithm | 4 bits as defined in TS 24.501 [26], clause 9.11.3.34 |
| | $KNAS_{enc}$ | Ciphering Key |
| | NAS COUNT | as documented in TS 24.501 [26] |
| | BEARER Id | fix value of '00000'B for 3GPP access and '00001'B for non-3GPP access |
| **Return Value** | deciphered octet string | |

| TTCN-3 External Function | | |
|---|---|---|
| **Name** | **fx_NR_AsIntegrityAlgorithm** | |
| **Description** | Apply integrity protection algorithm on a given octetstring | |
| **Parameters** | PDCP PDU | octetstring |
| | Integrity Algorithm | 3 bits as defined in TS 33.501 [25] |
| | $KRRC_{int}$ | Integrity key |
| | PDCP COUNT | octetstring, length 4 |
| | BEARER Id | the value of the DRB identity minus one |
| | Direction | UL: 0<br>DL: 1<br>(acc. to TS 33.501 [25], clause D.3) |
| **Return Value** | Message Authentication Code (4 octets) | |

# 9 IXIT proforma

## 9.1 Introduction

The partial IXIT proforma contained in the present document is provided for completion, when the related Abstract Test Suite(s) is(are) to be used against the Implementation Under Test (IUT).

The completed partial IXIT will normally be used in conjunction with the completed ICS, as it adds precision to the information provided by the ICS.

The PIXITs specified in TS 36.523-3 [12] subclause 9.1 apply. Additional 5GS PIXITs are specified in the following subclauses.

## 9.2 E-UTRA and NR PIXIT

**Table 9.2-1: EUTRA and NR PIXIT**

| Parameter Name | Parameter Type | Default Value | Supported Values | Description |
|---|---|---|---|---|

| | | | | |
|---|---|---|---|---|
| px_ENDC_BandCombination | ENDC_BandCombination_Type | DC_1A_n28A | | Band combination for EN-DC test case |
| px_ENDC_CA_BandCombination | ENDC_CA_BandCombination_Type | DC_1A_n28A_n78A | | EN-DC CA Band Combination |
| px_ENDC_SecondaryBandCombination | ENDC_BandCombination_Type | DC_1A_n77A | | Secondary band combination for EN-DC test case |
| px_NR_CA_BandCombination | NR_CA_BandCombination_Type | CA_n3A_n77A | | NR CA Band Combination |
| px_NR_DC_BandCombination | NR_DC_BandCombination_Type | DC_n78A_n257A | | NR DC Band Combination |
| px_NR_DC_CA_BandCombination | NR_DC_CA_BandCombination_Type | DC_n78A_n257G | | NR DC CA Band Combination |
| px_NR_CipheringAlgorithm | CipheringAlgorithm | nea2 | | Ciphering Algorithm (see Note 1) |
| px_NR_IntegrityProtAlgorithm | IntegrityProtAlgorithm | nia2 | | Integrity Algorithm (see Note 1) |
| px_NR_OverlappingNotSupportedBand_MFBI | integer | 1 | | A not supported NR band that is overlapping with a supported band (px_NR_PrimaryBand). Applied to MFBI test case scenario. |
| px_NR_PrimaryBand | integer | 1 | | NR primary band |
| px_NR_SecondaryBand | integer | 2 | | NR secondary band. Applied to inter-band and SUL test cases. |
| NOTE 1: Unless specified otherwise in the test case prose, the null algorithm shall not be used for verification.<br>NOTE 2: Void.<br>NOTE 3: Void. | | | | |

# 9.3 5GC PIXIT

**Table 9.3-1: Void**

**Table 9.3-2: 5GC PIXIT**

| Parameter Name | Parameter Type | Default Value | Supported Values | Description |
|---|---|---|---|---|
| px_NAS_5GC_AuthenticationType | NAS_5GC_AKA_Type | AKA_5G | AKA_5G, AKAP_EAP | NAS 5GC Authentication type |
| px_NAS_5GC_CipheringAlgorithm | B4_Type | ‘0010’B | | NAS 5GC Ciphering Algorithm (see Note 1) |
| px_NAS_5GC_IntegrityProtAlgorithm | B4_Type | ‘0010’B | | NAS 5GC Integrity Algorithm (see Note 1) |
| px_NAS_5GC_XRES_Length | integer | 16 | | NAS 5GC XRES length, in octets, used in Authentication |
| NOTE 1: Unless specified otherwise in the test case prose, the null algorithm shall not be used for verification. | | | | |

# 10 Postambles

## 10.1 Introduction

The purpose of the present clause 10 is to specify the postambles used to bring the UE to a well-defined state regardless of the UE state at the termination of main test body or of the SS conditions and values of the system information inherited from the test.

## 10.2 On E-UTRA/EPC

### 10.2.1 UE postamble states and procedures

In order to bring the UE to switched/powered off state there are some procedures that need to be executed. The identified procedures are shown in figure 10.2.1-1.

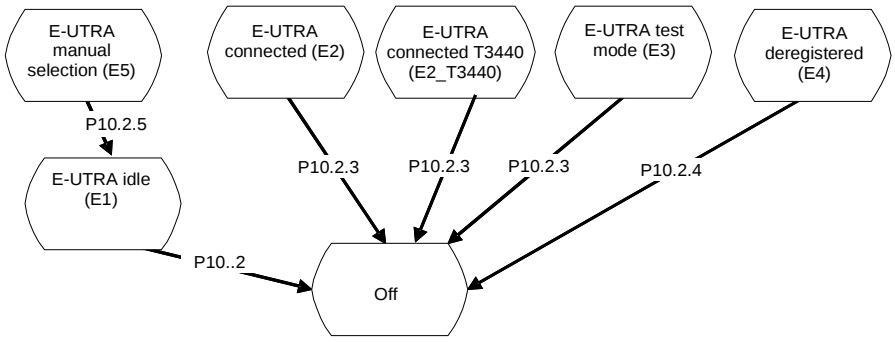


**Figure 10.2.1-1: UE postamble states and procedures for E-UTRA/EPC**

### 10.2.2 Switch/Power off procedure in State E1

**Table 10.2.2-1: Switch/Power off procedure**

| Step | Procedure | Message Sequence | |
|---|---|---|---|
| | | U - S | Message |
| 1-2a3Aa5 | Same as TS 36.523-3 [12] table 10.3.2.1-1, steps 1-2a3Aa5. | - | - |
| - | EXCEPTION: Step 2a3Aa5Aa1 describes behaviour depending UE implementation; the "lower case letter" identifies a step sequence that take place if the UE performs a specific action. | - | - |
| 2a3Aa5Aa1 | IF the UE is connected to one or more additional PDNs, then the procedure specified in table 10.2.2-2 may take place. | - | - |
| 2a3Aa6 - 2a4 | Same as TS 36.523-3 [12] table 10.3.2.1-1, steps 2a3Aa6 - 2a4. | - | - |

**Table 10.2.2-2: PDN disconnect procedure**

| Step | Procedure | Message Sequence | |
|---|---|---|---|
| | | U - S | Message |
| 1 | The UE transmits a PDN DISCONNECT REQUEST | --> | RRC: *ULInformationTransfer*<br>PDN DISCONNECT REQUEST |
| 2 | The SS transmits an *RRCConnectionReconfiguration* message to deactivate an EPS bearer. | <-- | RRC: *RRCConnectionReconfiguration*<br>NAS: DEACTIVATE EPS BEARER CONTEXT REQUEST |
| - | EXCEPTION: The events in steps 3 and 4 may occur in any order | - | - |
| 3 | The UE transmits an *RRCConnectionReconfigurationComplete* message to confirm the deactivation of EPS bearer. | --> | RRC: *RRCConnectionReconfigurationComplete* |
| 4 | The UE transmits an *ULInformationTransfer* message to accept deactivation of the EPS bearer. | --> | RRC: *ULInformationTransfer*<br>NAS: DEACTIVATE EPS BEARER CONTEXT ACCEPT |

## 10.2.3 Switch/Power off procedure in States E2 and E3

### 10.2.3.1 Procedure for E2 and E3

**Table 10.2.3.1-1: Switch/Power off procedure**

| Step | Procedure | Message Sequence | |
|---|---|---|---|
| | | U - S | Message |
| 1-2a1Aa2 | Same as TS 36.523-3 [12] table 10.3.3.1-1, steps 1-2a1Aa2. | - | - |
| - | EXCEPTION: Step 2a1Aa3a1 describes behaviour depending UE implementation; the "lower case letter" identifies a step sequence that take place if the UE performs a specific action. | - | - |
| 2a1Aa3a1 | IF the UE is connected to one or more additional PDNs, then the procedure specified in table 10.2.2-2 may take place. | - | - |
| 2a1-2a2 | Same as TS 36.523-3 [12] table 10.3.3.1-1, steps 2a1-2a2. | - | - |

### 10.2.3.2 Procedure for E2_T3440

**Table 10.2.3.2-1: RRC release and switch/power off procedure**

| Step | Procedure | Message Sequence | |
|---|---|---|---|
| | | U - S | Message |

| | | | |
|---|---|---|---|
| 1-4a3Aa5 | Same as TS 36.523-3 [12] table 10.3.3.2-1, steps 1-4a3Aa5. | - | - |
| - | EXCEPTION: Step 4a3Aa5Aa1 describes behaviour depending UE implementation; the "lower case letter" identifies a step sequence that take place if the UE performs a specific action. | - | - |
| 4a3Aa5Aa1 | IF the UE is connected to one or more additional PDNs, then the procedure specified in table 10.2.2-2 may take place. | - | - |
| 4a3Aa6 - 4a4 | Same as TS 36.523-3 [12] table 10.3.3.2-1, steps 4a3Aa6 – 4a4. | - | - |

### 10.2.4 Switch/Power off procedure in State E4

The procedure specified in TS 36.523-3 [12] subclause 10.3.4 applies.

### 10.2.5 Automatic selection mode procedure in State E5 (current cell, neighbour cell)

The procedure specified in TS 36.523-3 [12] subclause 10.3.5 applies.

## 10.3 On NR/5GC

### 10.3.1 UE postamble states and procedures

In order to bring the UE to the switched/powered off state, a procedure needs to be executed, which depends on the UE state at the end of test case body. The UE postamble start states and associated procedures are shown in figure 10.3.1-1.

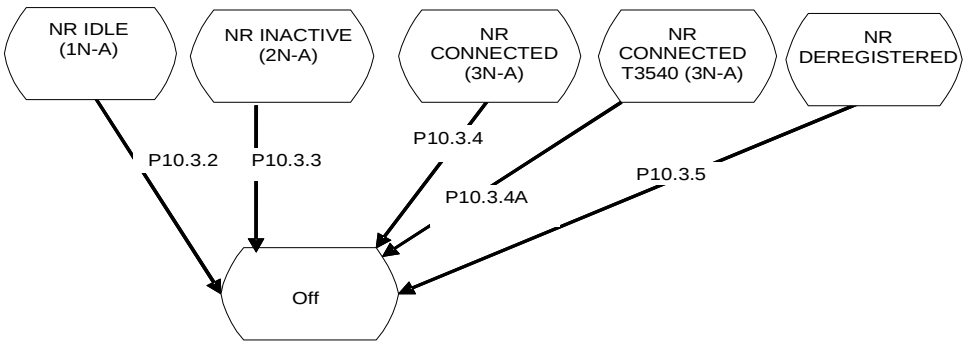


**Figure 10.3.1-1: UE postamble states and procedures for NR/5GC**

### 10.3.2 Switch/Power off procedure in State 1N-A

**Table 10.3.2-1: Switch/Power off procedure**

| Step | Procedure | Message Sequence |
|---|---|---|

| | | U - S | Message |
|---|---|---|---|
| 1 | Test procedure for Switch off / Power off in RRC_IDLE as specified in 38.508-1 [5] subclause 4.9.6.1 | - | - |

## 10.3.3 Switch/Power off procedure in State 2N-A

**Table 10.3.3-1: Switch/Power off procedure**

| Step | Procedure | Message Sequence | |
|---|---|---|---|
| | | U - S | Message |
| 1 | Test procedure for Switch off / Power off in RRC_INACTIVE as specified in 38.508-1 [5] subclause 4.9.6.2 | | |

## 10.3.4 Switch/Power off procedure in State 3N-A

**Table 10.3.4-1: Switch/Power off procedure**

| Step | Procedure | Message Sequence | |
|---|---|---|---|
| | | U - S | Message |
| 1 | Test procedure for Switch off / Power off in RRC_CONNECTED as specified in 38.508-1 [5] subclause 4.9.6.3 | - | - |

## 10.3.4A Switch/Power off procedure in State 3N-A with T3540 started

**Table 10.3.4A-1: Switch/Power off procedure**

| Step | Procedure | Message Sequence | |
|---|---|---|---|
| | | U - S | Message |
| 1 | Test procedure for Switch off / Power off in RRC_CONNECTED with T3540 started as specified in 38.508-1 [5] subclause 4.9.6.3A | - | - |

## 10.3.5 Switch/Power off procedure in NR DEREGISTERED

**Table 10.3.5-1: Switch/Power off procedure**

| Step | Procedure | Message Sequence | |
|---|---|---|---|
| | | U - S | Message |
| 1 | Test procedure for Switch off / Power off in State DEREGISTERED as specified in 38.508-1 [5] subclause 4.9.6.4 | - | - |

# 11 Guidelines on test execution

## 11.1 Introduction

Clause 11 provides the guidelines on test executions.

The restriction on test case execution is due to the number of frequencies available for the specific band under test specified in TS 38.508-1[5] and the number of frequencies used by the test cases specified in TS 38.523-1[8].

## 11.2 EN-DC

### 11.2.1 Single NR carrier

This clause provides the guidelines for the EN-DC test cases.

A test case using more than one radio frequency on NR, i.e. using the radio frequencies NRf2 or NRf3 or NRf4 specified in TS 38.508-1 [5], shall not be executed on:

Band combination DC_1A_n51A

Band combination DC_20A_n51A

Band combination DC_28A_n51A

Band combination DC_3A_n51A

Band combination DC_41A_n41A

Band combination DC_42A_n51A

Band combination DC_7A_n51A

The list of test cases is given below:

8.2.3.6.1a, 8.2.3.7.1a, 8.2.3.8.1a, 8.2.3.10.1, 8.2.3.11.1, 8.2.3.11.2

## 11.3 NR/5GC

### 11.3.1 NR/5GC single RAT

#### 11.3.1.1 Single NR carrier

This clause provides the guidelines for the NR/5GC test cases.

A test case using more than one radio frequency, i.e. using the radio frequencies NRf2 or NRf3 or NRf4 specified in TS 38.508-1 [5], shall not be executed on:

Band n51.

The list of test cases is given below:

6.1.1.1, 6.1.1.2, 6.1.1.3, 6.1.1.5, 6.1.1.6, 6.1.1.7, 6.1.1.8, 6.1.2.7, 6.1.2.11, 6.1.2.13, 6.1.2.14, 6.1.2.16, 6.1.2.18, 6.1.2.20, 6.1.2.21, 6.1.2.22, 6.3.1.1, 6.3.1.2, 6.3.1.3, 6.3.1.4, 6.3.1.5, 6.3.1.8, 6.3.1.9, 6.4.1.1, 6.4.1.2, 6.4.2.2,

8.1.1.2.1, 8.1.1.3.1, 8.1.1.3.3, 8.1.3.1.3, 8.1.3.1.6, 8.1.3.1.9, 8.1.3.1.11, 8.1.3.1.12, 8.1.3.1.14A, 8.1.3.1.15A, 8.1.3.1.20, 8.1.3.21, 8.1.4.1.2,

9.1.4.1, 9.1.5.1.1, 9.1.5.1.2, 9.1.5.1.4, 9.1.5.1.8, 9.1.5.1.10, 9.1.5.1.12, 9.1.5.1.14,

11.3.6, 11.3.8, 11.3.9.

A test case using more than two radio frequencies, i.e. using the radio frequencies NRf3 or NRf4 specified in TS 38.508-1 [5], shall not be executed on:

Band n30

The list of test cases is given below:

6.1.1.1, 6.1.1.2, 6.1.1.3, 6.1.1.5, 6.1.1.6, 6.1.1.7, 6.1.1.8, 6.1.2.7, 6.1.2.11, 6.1.2.20, 6.3.1.1, 6.3.1.2, 6.3.1.3, 6.3.1.5, 6.3.1.8, 6.4.1.1, 6.4.1.2, 6.4.2.2,

8.1.1.3.3,

9.1.5.1.2, 9.1.5.1.8.

### 11.3.1.2 NR carrier aggregation

The restriction on NR CA test case execution as listed in this clause is due to the restriction of bandwidth of an NR CA configuration accommodating the necessary number of NR radio frequencies.

These test cases with switched allocation of PCell and SCell on SCell shall avoid to be executed on an NR CA configuration with a secondary band having no UL frequency:

CA_n28A_n75A,

CA_n29A_n66A,

CA_n75A_n78A,

CA_n76A_n78A,

CA_n8A_n75A

The list of test cases is given below:

8.1.4.1.7.2

## 11.3.2 NR/5GC Inter-RAT

### 11.3.2.1 NR/E-UTRA Inter-RAT

This clause contains the guidelines for the NR/5GC and E-UTRA inter-RAT test cases executed on the different bands. According to TS 38.508-1 [5] clause 6.2.3.3, it is assumed that the NR and E-UTRA bands under test are not overlapping.

A test case using more than one radio frequency on E-UTRA, i.e. using the radio frequencies f2, f3 or f4 specified in TS 36.508 [10], shall not be executed on:

Band 13,

Band 18,

Band 31,

Band 72,

Band 73

The list of test cases is given below:

6.4.3.1,

8.1.1.3.4.

A test case using more than one radio frequency on NR, i.e. using the radio frequencies NRf2 or NRf3 or NRf4 specified in TS 38.508-1 [5], shall not be executed on:

Band n51.

The list of test cases is given below:

6.2.1.1, 6.2.1.3.

A test case using more than two radio frequencies on NR, i.e. using the radio frequencies NRf3 or NRf4 specified in TS 38.508-1 [5], shall not be executed on:

Band n30.

The list of test cases is given below:

6.2.1.1.

### 11.3.3 NR MFBI

The following NR MFBI test case shall be executed using the combinations specified in Table 11.3.3-1 for px_NR_OverlappingNotSupportedBand_MFBI and px_NR_PrimaryBand:

6.1.2.23.

**Table 11.3.3-1: NR MFBI bands combinations**

| px_NR_OverlappingNotSupportedBand_MFBI | px_NR_PrimaryBand (Note) |
|---|---|
| n2 | n25 |
| n25 | n2 |
| n38 | n41 |
| n41 | n38 |
| n77 | n78 |
| n78 | n77 |
| n257 | n258, n261 |
| n258 | n257 |
| n261 | n257 |
| Note: The UE supports one or more of the listed MFBI bands and does not support at least one overlapping band. If the UE supports all overlapping bands, these test cases are not applicable. | |

# Annex A (normative): Test Suites

This annex references the approved Test Suites, which accompany the present document. The Test Suites have been produced using the Testing and Test Control Notation version 3 (TTCN-3) according to ES 201 873 [4].

## A.1 Baseline of specifications

Table A.1-1 lists the core specifications and test specifications, which the delivered Test Suites are based upon.

**Table A.1-1: References of the test and core specifications**

| Type | Specification | Release | Version |
|---|---|---|---|
| **Core specifications** | TS 38.321 [13] | Note 1 | Note 2 |
| | TS 38.322 [14] | Note 1 | Note 2 |
| | TS 38.323 [15] | Note 1 | Note 2 |
| | TS 36.331 [17] | Note 1 | Note 2 |
| | TS 38.331 [16] | Note 1 | Note 2 |
| | TS 24.301 [18] | Note 1 | Note 2 |
| **Test specifications** | TS 36.508 [10] | Note 2 | Note 2 |
| | TS 36.509 [11] | Note 1 | Note 2 |
| | TS 38.508-1 [5] | Note 2 | Note 2 |
| | TS 38.508-2 [6] | Note 2 | Note 2 |
| | TS 38.509 [7] | Note 1 | Note 2 |
| | TS 38.523-1 [8] | Note 2 | Note 2 |
| | TS 38.523-2 [9] | Note 2 | Note 2 |
| NOTE 1: Latest release available, up to the release number of the present document.<br>NOTE 2: Latest available. | | | |

## A.2 5GS Test Suites

### A.2.1 EN-DC Test Suites

Table A.2.1-1 lists all approved test cases.

For a given test case, the following variants are distinguished (if applicable):

- FR1: FR1 NR frequency band(s) in the NR cell(s).

- FR2: FR2 NR frequency band(s) in the NR cell(s).

- FRx: Mix of FR1 NR frequency band(s) and FR2 NR frequency band(s) in the NR cell(s).

An "X" in columns FR1, FR2 or FRx indicates the test case is approved for the respective variant.

An "-" in columns FR1, FR2 or FRx indicates the test case is not applicable to the respective variant.

**Table A.2.1-1: EN-DC TTCN test cases**

| Test case | Description | FR1 | FR2 | FRx |
|---|---|---|---|---|
| 7.1.1.1.1.ENDC | Correct selection of RACH parameters / Random access preamble and PRACH resource explicitly signalled to the UE by RRC / contention free random access procedure | X | X | - |
| 7.1.1.1.1a.ENDC | Correct selection of RACH parameters / Random access preamble and PRACH resource explicitly signalled to the UE by PDCCH Order / contention free random access procedure | X | X | - |
| 7.1.1.1.2.ENDC | Random access procedure / Successful/ C-RNTI Based/Preamble selected by MAC itself | X | X | - |
| 7.1.1.2.1.ENDC | Correct Handling of DL MAC PDU / Assignment / HARQ process | X | X | - |
| 7.1.1.3.1.ENDC | Correct Handling of UL MAC PDU / Assignment / HARQ process | X | X | - |
| 7.1.1.3.2.ENDC | Logical channel prioritization handling | X | X | - |
| 7.1.1.3.3.ENDC | Correct handling of MAC control information / Scheduling requests | X | X | - |
| 7.1.1.3.4.ENDC | Correct handling of MAC control information / Buffer status / UL data arrive in the UE Tx buffer / Regular BSR | X | X | - |
| 7.1.1.3.5.ENDC | Correct handling of MAC control information / Buffer Status / UL resources are allocated / Padding BSR | X | X | - |
| 7.1.1.3.6.ENDC | Correct handling of MAC control information / Buffer status / Periodic BSR timer expires | X | X | - |
| 7.1.1.3.7.ENDC | UE power headroom reporting / Periodic reporting / DL pathloss change reporting | X | X | - |
| 7.1.1.4.1.1.ENDC | DL-SCH Transport Block Size selection / DCI format 1_0 | X | | - |
| 7.1.1.4.2.1.ENDC | UL-SCH transport block size selection / DCI format 0_0 / Transform precoding disabled | X | | - |
| 7.1.1.4.2.3.ENDC | UL-SCH transport block size selection / DCI format 0_1 / RA type 0/RA Type 1 / Transform precoding disabled | X | | - |
| 7.1.1.5.1.ENDC | DRX operation / Short cycle not configured / Parameters configured by RRC | X | X | - |
| 7.1.1.5.2.ENDC | DRX operation / Short cycle not configured /Long DRX command MAC control element reception | X | X | - |
| 7.1.1.5.3.ENDC | DRX operation / Short cycle configured / Parameters configured by RRC | X | X | - |
| 7.1.1.5.4.ENDC | DRX Operation / Short cycle configured / DRX command MAC control element reception | X | X | - |
| 7.1.2.2.1.ENDC | UM RLC / Segmentation and reassembly / 6-bit SN / Segmentation Info (SI) field | X | X | - |
| 7.1.2.2.2.ENDC | UM RLC / Segmentation and reassembly / 12-bit SN / Segmentation Info (SI) field | X | X | - |
| 7.1.2.2.3.ENDC | UM RLC / 6-bit SN / Correct use of sequence numbering | X | X | - |
| 7.1.2.2.4.ENDC | UM RLC / 12-bit SN / Correct use of sequence numbering | X | X | - |
| 7.1.2.2.5.ENDC | UM RLC / Receive Window operation and t-Reassembly expiry | X | X | - |
| 7.1.2.2.6.ENDC | UM RLC / RLC re-establishment procedure | X | X | - |
| 7.1.2.3.1.ENDC | AM RLC / 12-bit SN/Segmentation and reassembly / Segmentation Info (SI) field | X | X | - |
| 7.1.2.3.2.ENDC | AM RLC / 18-bit SN/Segmentation and reassembly / Segmentation Info (SI) field | X | X | - |
| 7.1.2.3.3.ENDC | AM RLC / 12-bit SN / Correct use of sequence numbering | X | X | - |
| 7.1.2.3.5.ENDC | AM RLC / Control of transmit window / Control of receive window | X | X | - |
| 7.1.2.3.6.ENDC | AM RLC / Polling for status | X | X | - |
| 7.1.2.3.7.ENDC | AM RLC / Receiver status triggers | X | X | - |
| 7.1.2.3.8.ENDC | AM RLC / Reconfiguration of RLC parameters by upper layers | X | X | - |
| 7.1.2.3.9.ENDC | AM RLC / Reassembling of AMD PDUs | X | X | - |
| 7.1.2.3.10.ENDC | AM RLC / Re-transmission of RLC PDU with and without re-segmentation | X | X | - |
| 7.1.2.3.11.ENDC | AM RLC / RLC re-establishment procedure | X | X | - |
| 7.1.3.1.1.ENDC | Maintenance of PDCP sequence numbers / User plane / 12-bit SN | X | X | - |
| 7.1.3.1.2.ENDC | Maintenance of PDCP sequence numbers / User plane / 18-bit SN | X | X | - |
| 7.1.3.2.1.ENDC | Integrity protection / Correct functionality of encryption algorithm SNOW3G / SRB / DRB | X | X | - |

| | | | | |
|---|---|---|---|---|
| 7.1.3.2.2.ENDC | Integrity protection / Correct functionality of encryption algorithm AES / SRB / DRB | X | X | - |
| 7.1.3.2.3.ENDC | Integrity protection / Correct functionality of encryption algorithm ZUC / SRB / DRB | X | X | - |
| 7.1.3.3.1.ENDC | Ciphering and deciphering / Correct functionality of encryption algorithm SNOW3G / SRB / DRB | X | X | - |
| 7.1.3.3.2.ENDC | Ciphering and deciphering / Correct functionality of encryption algorithm AES / SRB / DRB | X | X | - |
| 7.1.3.3.3.ENDC | Ciphering and deciphering / Correct functionality of encryption algorithm ZUC / SRB / DRB | X | X | - |
| 7.1.3.4.1.ENDC | PDCP handover / Lossless handover / PDCP sequence number maintenance/PDCP status report to convey the information on missing or acknowledged PDCP SDUs at handover/ In-order delivery and duplicate elimination in the downlink | X | X | - |
| 7.1.3.4.2.ENDC | PDCP handover / Non-lossless handover / PDCP sequence number maintenance | X | X | - |
| 7.1.3.5.1.ENDC | PDCP Discard | X | X | - |
| 7.1.3.5.2.ENDC | PDCP Uplink Routing / Split DRB | X | X | - |
| 7.1.3.5.3.ENDC | PDCP Data Recovery | X | X | - |
| 7.1.3.5.4.ENDC | PDCP reordering / Maximum re-ordering delay below t-Reordering / t-Reordering timer operations | X | X | - |
| 8.2.1.1.1.ENDC | UE capability transfer / Success / EN-DC | X | X | - |
| 8.2.2.1.1.ENDC | SRB3 Establishment, Reconfiguration and Release / NR addition, modification and release / EN-DC | X | X | - |
| 8.2.2.4.1.ENDC | PSCell addition, modification and release / SCG DRB / EN-DC | X | X | - |
| 8.2.2.5.1.ENDC | PSCell addition, modification and release / Split DRB / EN-DC | X | X | - |
| 8.2.2.6.1.ENDC | Bearer Modification / MCG DRB / SRB / PDCP version change / EN-DC | X | X | - |
| 8.2.2.7.1.ENDC | Bearer Modification / Handling for bearer type change without security key change / EN-DC | X | X | - |
| 8.2.2.8.1.ENDC | Bearer Modification / Handling for bearer type change with security key change / EN-DC | X | X | - |
| 8.2.2.9.1.ENDC | Bearer Modification / Uplink data path / Split DRB Reconfiguration / EN-DC | X | X | - |
| 8.2.3.1.1.ENDC | Measurement configuration control and reporting / Inter-RAT measurements / Event B1 / Measurement of NR cells / EN-DC | X | X | - |
| 8.2.3.2.1.ENDC | Measurement configuration control and reporting / Inter-RAT measurements / Event B1 / Measurement of NR cells / RSRQ based measurements / EN-DC | X | | - |
| 8.2.3.3.1.ENDC | Measurement configuration control and reporting / Inter-RAT measurements / Periodic reporting / Measurement of NR cells / EN-DC | X | X | - |
| 8.2.3.4.1.ENDC | Measurement configuration control and reporting / Event A1 / Measurement of NR PSCell / EN-DC | X | X | - |
| 8.2.3.5.1.ENDC | Measurement configuration control and reporting / Event A2 / Measurement of NR PSCell / EN-DC | X | X | - |
| 8.2.3.6.1.ENDC | Measurement configuration control and reporting / Event A3 / Measurement of Neighbor NR cell / Intra-frequency measurements / EN-DC | X | X | - |
| 8.2.3.6.1a.ENDC | Measurement configuration control and reporting / Event A3 / Measurement of Neighbour NR cell / Inter-frequency measurements / EN-DC | X | X | - |
| 8.2.3.6.1b.ENDC | Measurement configuration control and reporting / Event A3 / Measurement of Neighbour NR cell / Inter-band measurements / EN-DC | | | - |
| 8.2.3.7.1.ENDC | Measurement configuration control and reporting / Event A4 / Measurement of Neighbor NR cell / Intra-frequency measurements / EN-DC | X | X | - |
| 8.2.3.7.1a.ENDC | Measurement configuration control and reporting / Event A4 / Measurement of Neighbour NR cell / Inter-frequency measurements / EN-DC | X | X | - |
| 8.2.3.7.1b.ENDC | Measurement configuration control and reporting / Event A4 / Measurement of Neighbour NR cell / Inter-band measurements / EN-DC | X | | - |
| 8.2.3.8.1.ENDC | Measurement configuration control and reporting / Event A5 / Measurement of Neighbor NR cell / Intra-frequency measurements / EN-DC | X | X | - |
| 8.2.3.8.1a.ENDC | Measurement configuration control and reporting / Event A5 / Measurement of Neighbour NR cell / Inter-frequency measurements / EN-DC | X | X | - |
| 8.2.3.8.1b.ENDC | Measurement configuration control and reporting / Event A5 / Measurement of Neighbour NR cell / Inter-band measurements / EN-DC | X | | - |
| 8.2.3.12.1.ENDC | Measurement configuration control and reporting / Inter-RAT measurements / Event B2 / Measurement of NR cells / EN-DC | X | | - |
| 8.2.3.13.1.ENDC | PCell Handover with SCG change / Reconfiguration with sync / SCG DRB / EN-DC | X | | - |
| 8.2.3.14.1.ENDC | SCG change / Reconfiguration with sync / Split DRB / EN-DC | X | X | - |
| 8.2.3.15.1.ENDC | Measurement configuration control and reporting / Two simultaneous events A2 and A3 (intra-frequency measurements) / Measurement of Neighbour NR cells / EN-DC | X | | - |

| | | | | |
|---|---|---|---|---|
| 8.2.3.16.1.ENDC | Measurement configuration control and reporting / SRB3 / Intra NR measurements / EN-DC | X | X | - |
| 8.2.4.1.1.1.ENDC | NR CA / NR SCell addition / modification / release / Success / EN-DC / Intra-band Contiguous CA | X | X | - |
| 8.2.4.1.1.3.ENDC | NR CA / NR SCell addition / modification / release / Success / EN-DC / Inter-band CA | X | | - |
| 8.2.4.3.1.1.ENDC | NR CA / SCell change / Intra-NR measurement event A6 / SRB3 / EN-DC / Intra-band Contiguous CA | X | | - |
| 8.2.4.3.1.3.ENDC | NR CA / SCell change / Intra-NR measurement event A6 / SRB3 / EN-DC / Inter-band CA | X | | |
| 8.2.5.1.1.ENDC | Radio link failure / PSCell addition failure - random access problem / EN-DC | X | X | |
| 8.2.5.2.1.ENDC | Radio link failure / PSCell out of sync indication / Radio link failure / EN-DC | X | X | - |
| 8.2.5.3.1.ENDC | Radio link failure / rlc-MaxNumRetx failure / EN-DC | X | X | |
| 8.2.5.4.1.ENDC | Reconfiguration failure / SCG change failure / EN-DC | X | X | - |
| 8.2.6.2.1.ENDC | Processing delay / PSCell addition / SCG DRB / Success / Latency check / EN-DC | X | X | - |
| 10.2.1.1.ENDC | Default EPS bearer context activation | X | X | - |
| 10.2.1.2.ENDC | Dedicated EPS bearer context activation | X | X | - |
| 10.2.2.1.ENDC | EPS bearer resource allocation / modification | X | X | - |

## A.2.2 NR/5GC Test Suites

Table A.2.2-1 lists all approved test cases.

For a given test case, the following variants are distinguished (if applicable):

- FR1: FR1 NR frequency band(s) in the NR cell(s).
- FR2: FR2 NR frequency band(s) in the NR cell(s).
- FRx: Mix of FR1 NR frequency band(s) and FR2 NR frequency band(s) in the NR cell(s).

An "X" in columns FR1 or FR2 indicates the test case is approved for the respective variant.

An "-" in columns FR1, FR2 or FRx indicates the test case is not applicable to the respective variant.

**Table A.2.2-1: NR/5GC TTCN test cases**

| Test case | Description | FR1 | FR2 | FRx |
|---|---|---|---|---|
| 6.1.1.1.NR5GC | PLMN selection of RPLMN, HPLMN/EHPLMN, UPLMN and OPLMN / Automatic mode | X | | - |
| 6.1.1.2.NR5GC | PLMN selection of "Other PLMN/access technology combinations" / Automatic mode | X | | - |
| 6.1.1.3.NR5GC | Cell reselection of ePLMN in manual mode | X | | - |
| 6.1.1.4.NR5GC | PLMN selection in shared network environment / Automatic mode | X | | - |
| 6.1.1.5.NR5GC | PLMN selection of RPLMN, HPLMN/EHPLMN, UPLMN and OPLMN / Automatic mode / User reselection | X | | - |
| 6.1.1.7.NR5GC | PLMN selection of RPLMN or (E)HPLMN; Automatic mode | X | | - |
| 6.1.1.8.NR5GC | PLMN selection of RPLMN or (E)HPLMN; Manual mode | X | | - |
| 6.1.2.1.NR5GC | Cell Selection/Qrxlevmin & Cell Reselection (Intra NR) | X | | - |
| 6.1.2.2.NR5GC | Cell Selection/Qqualmin/Intra NR / Serving cell becomes non-suitable (Srxlev > 0, Squal < 0) | | | - |
| 6.1.2.3.NR5GC | Cell selection / Intra NR/ Serving cell becomes non-suitable (S<0 , MIB Indicated barred) | X | | - |
| 6.1.2.4.NR5GC | Cell reselection for interband operation | X | | - |
| 6.1.2.5.NR5GC | Cell reselection for interband operation using Pcompensation / Between FDD and TDD | X | | - |
| 6.1.2.7.NR5GC | Cell reselection / Equivalent PLMN | X | | - |
| 6.1.2.8.NR5GC | Cell reselection / Equivalent PLMN / Single Frequency operation | X | | - |
| 6.1.2.9.NR5GC | Cell reselection using Qhyst, Qoffset and Treselection | X | | - |
| 6.1.2.11.NR5GC | Area Specific SIBs using systemInformationAreaID | X | | - |
| 6.1.2.12.NR5GC | Cell reselection using cell status and cell reservations / cellReservedForOtherUse | X | | - |
| 6.1.2.13.NR5GC | Cell reselection using cell status and cell reservations / Access Identity 1 , 2 and 12 to | X | | - |

| | | | | |
|---|---|---|---|---|
| | 14 - cellReservedForOperatorUse | | | |
| 6.1.2.14.NR5GC | Cell reselection using cell status and cell reservations / Access Identity 11 or 15 - cellReservedForOperatorUse | X | | - |
| 6.1.2.15.NR5GC | Cell reselection in shared network environment | X | | - |
| 6.1.2.16.NR5GC | Inter-frequency cell reselection (equal priority) | X | | - |
| 6.1.2.17.NR5GC | Cell reselection / Cell-specific reselection parameters provided by the network in a neighbouring cell list | X | | - |
| 6.1.2.18.NR5GC | Cell reselection, Sintrasearch, Snonintrasearch | X | | - |
| 6.1.2.19.NR5GC | Speed Dependent Cell Reselection | X | | - |
| 6.1.2.20.NR5GC | Inter-frequency cell reselection according to cell reselection priority provided by SIBs | X | | - |
| 6.1.2.21.NR5GC | Cell reselection , SIntraSearchQ and SnonIntraSearchQ | X | | - |
| 6.1.2.22.NR5GC | Inter-frequency cell reselection based on common priority information with parameters ThreshX, HighQ, ThreshX, LowQ and ThreshServing, LowQ | X | | - |
| 6.1.2.23.NR5GC | Cell Reselection / MFBI | X | | - |
| 6.2.1.1.NR5GC | Inter-RAT PLMN Selection / Selection of correct RAT for OPLMN / Automatic mode | X | | - |
| 6.2.1.2.NR5GC | Inter-RAT PLMN Selection / Selection of correct RAT for UPLMN / Automatic mode | X | | - |
| 6.2.1.3.NR5GC | Inter-RAT PLMN Selection / Selection of correct PLMN and RAT in shared network environment / Automatic mode | X | | - |
| 6.2.1.4.NR5GC | Inter-RAT PLMN Selection / Selection of correct RAT from the OPLMN list / Manual mode | X | | - |
| 6.2.1.5.NR5GC | Inter-RAT Background HPLMN Search / Search for correct RAT for HPLMN / Automatic Mode | X | | - |
| 6.2.2.1.NR5GC | Inter-RAT cell selection / From NR RRC_IDLE to EUTRA_Idle / Serving cell becomes non-suitable | X | | - |
| 6.2.2.2.NR5GC | Inter-RAT cell selection / From E-UTRA_Idle to NR RRC_IDLE / Serving cell becomes non-suitable | X | | - |
| 6.2.3.1.NR5GC | Inter-RAT cell reselection / From E-UTRA_Idle to NR RRC_IDLE (lower priority & higher priority , Srxlev based) | X | | - |
| 6.2.3.2.NR5GC | Inter-RAT cell reselection / From E-UTRA_Idle to NR RRC_IDLE (lower priority & higher priority , Squal based) | X | | - |
| 6.2.3.3.NR5GC | Inter-RAT cell reselection / From NR RRC_Idle to E-UTRA_IDLE (lower priority & higher priority , Srxlev based) | X | | - |
| 6.2.3.4.NR5GC | Inter-RAT cell reselection / From NR RRC_Idle to E-UTRA_IDLE (lower priority & higher priority , Squal based) | X | | - |
| 6.2.3.5.NR5GC | Inter-RAT cell reselection / From NR RRC_IDLE to E-UTRA_Idle according to RAT priority provided by dedicated signalling (RRCRelease) | X | | - |
| 6.2.3.6.NR5GC | Inter-RAT cell reselection / From E-UTRA_Idle to NR RRC_IDLE according to RAT priority provided by dedicated signalling (RRConnRelease) | X | | - |
| 6.2.3.7.NR5GC | Inter-RAT cell reselection / From NR RRC_IDLE to E-UTRA RRC_Idle, Snonintrasearch | X | | - |
| 6.2.3.8.NR5GC | Inter-RAT cell reselection / From E-UTRA RRC_IDLE to NR RRC_Idle, Snonintrasearch | X | | - |
| 6.2.3.9.NR5GC | Speed Dependent Cell Reselection (NR RRC_IDLE to E-UTRA RRC_IDLE) | X | | - |
| 6.3.1.1.NR5GC | Steering of UE in roaming during registration/security check successful using List Type 1 | X | | - |
| 6.3.1.2.NR5GC | Steering of UE in roaming during registration/security check successful but SOR Transparent container indicates ACK has been NOT been requested | X | | - |
| 6.3.1.3.NR5GC | Steering of UE in roaming during registration/security check unsuccessful/Automatic mode | X | | - |
| 6.3.1.4.NR5GC | Steering of UE in roaming during registration/security check unsuccessful/Manual mode | X | | - |
| 6.3.1.5.NR5GC | Steering of UE in roaming during registration/UE configured to receive Steering of Roaming information but does not receive Steering of Roaming from Network | X | | - |
| 6.3.1.8.NR5GC | Steering of UE in roaming after registration/automatic plmn selection mode | X | | - |
| 6.3.1.9.NR5GC | Steering of UE in roaming after registration/manual plmn selection mode | X | | - |
| 6.4.1.1.NR5GC | PLMN Selection/Higher priority/HPLMN in Automatic PLMN Selection Mode | X | | - |
| 6.4.1.2.NR5GC | Cell reselection of ePLMN in manual mode | X | | - |
| 6.4.2.1.NR5GC | Cell Selection/Qrxlevmin & Cell Reselection (Intra NR in RRC_INACTIVE state) | X | | - |
| 6.4.2.2.NR5GC | Inter-frequency cell reselection according to cell reselection priority provided by SIBs in RRC_INACTIVE state | X | | - |
| 6.4.3.1.NR5GC | Inter-RAT cell reselection / From NR RRC_INACTIVE to E-UTRA RRC_IDLE (lower priority & higher priority , Srxlev based) | X | | - |

| | | | | |
|---|---|---|---|---|
| 7.1.1.1.1.NR5GC | Correct selection of RACH parameters / Random access preamble and PRACH resource explicitly signalled to the UE by RRC / contention free random access procedure | X | | - |
| 7.1.1.1.1a.NR5GC | Correct selection of RACH parameters / Random access preamble and PRACH resource explicitly signalled to the UE by PDCCH Order / contention free random access procedure | X | | - |
| 7.1.1.1.2.NR5GC | Random access procedure / Successful/ C-RNTI Based/Preamble selected by MAC itself | X | | - |
| 7.1.1.1.3.NR5GC | Random access procedure / Successful/SI request | X | | - |
| 7.1.1.1.6.NR5GC | Random access procedure / Successful/ Temporary C-RNTI Based/Preamble selected by MAC itself | X | | - |
| 7.1.1.2.1.NR5GC | Correct Handling of DL MAC PDU / Assignment / HARQ process | X | | - |
| 7.1.1.2.3.NR5GC | Correct HARQ process handling / CCCH | X | | - |
| 7.1.1.2.4.NR5GC | Correct HARQ process handling / BCCH | x | | - |
| 7.1.1.3.1.NR5GC | Correct Handling of UL MAC PDU / Assignment / HARQ process | X | | - |
| 7.1.1.3.2.NR5GC | Logical channel prioritization handling | X | | - |
| 7.1.1.3.3.NR5GC | Correct handling of MAC control information / Scheduling requests | X | | - |
| 7.1.1.3.4.NR5GC | Correct handling of MAC control information / Buffer status / UL data arrive in the UE Tx buffer / Regular BSR | X | | - |
| 7.1.1.3.5.NR5GC | Correct handling of MAC control information / Buffer Status / UL resources are allocated / Padding BSR | X | | - |
| 7.1.1.3.6.NR5GC | Correct handling of MAC control information / Buffer status / Periodic BSR timer expires | X | | - |
| 7.1.1.3.7.NR5GC | UE power headroom reporting / Periodic reporting / DL pathloss change reporting | X | | - |
| 7.1.1.4.1.1.NR5GC | DL-SCH Transport Block Size selection / DCI format 1_0 | X | | - |
| 7.1.1.4.2.1.NR5GC | UL-SCH transport block size selection / DCI format 0_0 / Transform precoding disabled | X | | - |
| 7.1.1.4.2.3.NR5GC | UL-SCH transport block size selection / DCI format 1_1 / RA type 0 / RA Type 1 / Transform precoding disabled | X | | - |
| 7.1.1.4.2.5.NR5GC | UL-SCH Transport Block Size selection / DCI format 0_0 / Transform precoding and 64QAM | X | | - |
| 7.1.1.5.1.NR5GC | DRX operation / Short cycle not configured / Parameters configured by RRC | X | | - |
| 7.1.1.5.2.NR5GC | DRX operation / Short cycle not configured /Long DRX command MAC control element reception | X | | - |
| 7.1.1.5.3.NR5GC | DRX operation / Short cycle configured / Parameters configured by RRC | X | | - |
| 7.1.1.5.4.NR5GC | DRX Operation / Short cycle configured / DRX command MAC control element reception | X | | - |
| 7.1.1.9.1.NR5GC | MAC Reset | X | | - |
| 7.1.2.2.1.NR5GC | UM RLC / Segmentation and reassembly / 6-bit SN / Segmentation Info (SI) field | X | | - |
| 7.1.2.2.2.NR5GC | UM RLC / Segmentation and reassembly / 12-bit SN / Segmentation Info (SI) field | X | | - |
| 7.1.2.2.3.NR5GC | UM RLC / 6-bit SN / Correct use of sequence numbering | X | | - |
| 7.1.2.2.4.NR5GC | UM RLC / 12-bit SN / Correct use of sequence numbering | X | | - |
| 7.1.2.2.5.NR5GC | UM RLC / Receive Window operation and t-Reassembly expiry | X | | - |
| 7.1.2.2.6.NR5GC | UM RLC / RLC re-establishment procedure | X | | - |
| 7.1.2.3.1.NR5GC | AM RLC / 12-bit SN/Segmentation and reassembly / Segmentation Info (SI) field | X | | - |
| 7.1.2.3.2.NR5GC | AM RLC / 18-bit SN/Segmentation and reassembly / Segmentation Info (SI) field | X | | - |
| 7.1.2.3.3.NR5GC | AM RLC / 12-bit SN / Correct use of sequence numbering | X | | - |
| 7.1.2.3.5.NR5GC | AM RLC / Control of transmit window / Control of receive window | X | | - |
| 7.1.2.3.6.NR5GC | AM RLC / Polling for status | X | | - |
| 7.1.2.3.7.NR5GC | AM RLC / Receiver status triggers | X | | - |
| 7.1.2.3.9.NR5GC | AM RLC / Reassembling of AMD PDUs | X | | - |
| 7.1.2.3.8.NR5GC | AM RLC / Reconfiguration of RLC parameters by upper layers | X | | - |
| 7.1.2.3.10.NR5GC | AM RLC / Re-transmission of RLC PDU with and without re-segmentation | X | | - |
| 7.1.2.3.11.NR5GC | AM RLC / RLC re-establishment procedure | X | | - |
| 7.1.3.1.1.NR5GC | Maintenance of PDCP sequence numbers / User plane / 12-bit SN | X | | - |
| 7.1.3.1.2.NR5GC | Maintenance of PDCP sequence numbers / User plane / 18-bit SN | X | | - |
| 7.1.3.2.1.NR5GC | Integrity protection / Correct functionality of encryption algorithm SNOW3G / SRB / DRB | X | | - |
| 7.1.3.2.2.NR5GC | Integrity protection / Correct functionality of encryption algorithm AES / SRB / DRB | X | | - |
| 7.1.3.2.3.NR5GC | Integrity protection / Correct functionality of encryption algorithm ZUC / SRB / DRB | X | | - |
| 7.1.3.3.1.NR5GC | Ciphering and deciphering / Correct functionality of encryption algorithm SNOW3G / SRB / DRB | X | | - |

| | | | | |
|---|---|---|---|---|
| 7.1.3.3.2.NR5GC | Ciphering and deciphering / Correct functionality of encryption algorithm AES / SRB / DRB | X | | - |
| 7.1.3.3.3.NR5GC | Ciphering and deciphering / Correct functionality of encryption algorithm ZUC / SRB / DRB | X | | - |
| 7.1.3.4.1.NR5GC | PDCP handover / Lossless handover / PDCP sequence number maintenance/PDCP status report to convey the information on missing or acknowledged PDCP SDUs at handover/ In-order delivery and duplicate elimination in the downlink | X | | - |
| 7.1.3.4.2.NR5GC | PDCP handover / Non-lossless handover / PDCP sequence number maintenance | X | | - |
| 7.1.3.5.1.NR5GC | PDCP Discard | X | | - |
| 7.1.3.5.4.NR5GC | PDCP reordering / Maximum re-ordering delay below t-Reordering / t-Reordering timer operations | X | | - |
| 7.1.4.1.NR5GC | SDAP Data Transfer and PDU Header Handling UL/DL | X | | - |
| 7.1.4.2.NR5GC | SDAP Data Transfer handling without Header UL/DL | X | | - |
| 8.1.1.1.1.NR5GC | RRC / Paging for connection / Multiple paging records | X | | - |
| 8.1.1.1.2.NR5GC | RRC / Paging for connection / Shared network environment | X | | - |
| 8.1.1.2.1.NR5GC | RRC connection establishment / Return to idle state after T300 expiry | X | | - |
| 8.1.1.2.3.NR5GC | RRC connection establishment / RRC Reject with wait time | X | | - |
| 8.1.1.3.1.NR5GC | RRC connection release / Redirection to another NR frequency | X | | - |
| 8.1.1.3.2.NR5GC | RRC connection release / Redirection from NR to E-UTRAN | X | | - |
| 8.1.1.3.3.NR5GC | RRC connection release / Success / With priority information | X | | - |
| 8.1.1.3.4.NR5GC | RRC connection release / Success / With priority information / E-UTRA | X | | - |
| 8.1.1.4.1.NR5GC | RRC resume / Suspend-Resume / RNA update / Success | X | | - |
| 8.1.1.4.2.NR5GC | RRC resume / Suspend-Resume / RRC setup / T319 expiry | X | | - |
| 8.1.2.1.1.NR5GC | RRC reconfiguration / DRB / SRB / Establishment / Modification / Release / Success | X | | - |
| 8.1.2.1.2.NR5GC | RRC reconfiguration / RRC bearer establishment / uplinkTxDirectCurrentList | X | | - |
| 8.1.2.1.5.1.NR5GC | NR CA / RRC reconfiguration / SCell addition / modification / release / Success / Intra-band Contiguous CA | X | | - |
| 8.1.2.1.5.2.NR5GC | NR CA / RRC reconfiguration / SCell addition / modification / release / Success / Inter-band CA | X | | - |
| 8.1.3.1.1.NR5GC | Measurement configuration control and reporting / Intra NR measurements / Event A1 / Event A2 | X | | - |
| 8.1.3.1.2.NR5GC | Measurement configuration control and reporting / Event A3 / Measurement of Neighbor NR cell / Intra-frequency measurements | X | | |
| 8.1.3.1.3.NR5GC | Measurement configuration control and reporting / Event A3 / Measurement of Neighbor NR cell / Inter-frequency measurements | X | | - |
| 8.1.3.1.4.NR5GC | Measurement configuration control and reporting / Event A3 / Measurement of Neighbor NR cell / Inter-band measurements | X | | - |
| 8.1.3.1.5.NR5GC | Measurement configuration control and reporting / Event A4 / Measurement of Neighbor NR cell / Intra-frequency measurements | X | | - |
| 8.1.3.1.6.NR5GC | Measurement configuration control and reporting / Event A4 / Measurement of Neighbor NR cell / Inter-frequency measurements | X | | - |
| 8.1.3.1.7.NR5GC | Measurement configuration control and reporting / Event A4 / Measurement of Neighbor NR cell / Inter-band measurements | X | | - |
| 8.1.3.1.8.NR5GC | Measurement configuration control and reporting / Event A5 / Measurement of Neighbor NR cell / Intra-frequency measurements | X | | - |
| 8.1.3.1.9.NR5GC | Measurement configuration control and reporting / Event A5 / Measurement of Neighbor NR cell / Inter-frequency measurements | X | | - |
| 8.1.3.1.10.NR5GC | Measurement configuration control and reporting / Event A5 / Measurement of Neighbor NR cell / Inter-band measurements | X | | - |
| 8.1.3.1.11.NR5GC | Measurement configuration control and reporting / Intra NR measurements / Two simultaneous events A3 (intra and inter-frequency measurements) / RSRQ based measurements | X | | - |
| 8.1.3.1.12.NR5GC | Measurement configuration control and reporting / Intra NR measurements / Two simultaneous events A5 (intra and inter-frequency measurements) / SINR based measurements | X | | - |
| 8.1.3.1.15A.NR5GC | Measurement configuration control and reporting / Intra NR measurements / Blacklisting | X | | - |
| 8.1.3.1.16.NR5GC | Measurement configuration control and reporting / Intra NR measurements / Whitelisting | X | | - |
| 8.1.3.1.17.1.NR5GC | NR CA / Measurement configuration control and reporting / Intra NR measurements / Event A6 / Intra-band Contiguous CA | X | | - |
| 8.1.3.1.17.2.NR5 | NR CA / Measurement configuration control and reporting / Intra NR measurements / | X | | - |

| | | | | |
|---|---|---|---|---|
| GC | Event A6 / Inter-band CA | | | |
| 8.1.3.1.17.3.NR5GC | NR CA / Measurement configuration control and reporting / Intra NR measurements / Event A6 / Intra-band non-Contiguous CA | X | | - |
| 8.1.3.1.18.1.NR5GC | NR CA / Measurement configuration control and reporting / Intra NR measurements / Additional measurement reporting / Intra-band Contiguous CA | X | | |
| 8.1.3.1.18.2.NR5GC | NR CA / Measurement configuration control and reporting / Intra NR measurements / Additional measurement reporting / Inter-band CA | X | | - |
| 8.1.3.1.18.3.NR5GC | NR CA / Measurement configuration control and reporting / Intra NR measurements / Additional measurement reporting / Intra-band non-Contiguous CA | X | | - |
| 8.1.3.1.20.NR5GC | Measurement configuration control and reporting / Measurement Gaps / gapFR1 | X | | - |
| 8.1.3.1.23.NR5GC | Measurement configuration control and reporting / Intra NR measurements / Continuation of the measurements after RRC Resume | X | | - |
| 8.1.3.2.1.NR5GC | Measurement configuration control and reporting / Inter-RAT measurements / Event B1 / Measurement of E-UTRA cells | X | | |
| 8.1.3.2.2.NR5GC | Measurement configuration control and reporting / Inter-RAT measurements / Event B2 / Measurement of E-UTRA cells | X | | - |
| 8.1.3.2.3.NR5GC | Measurement configuration control and reporting / Inter-RAT measurements / Event B2 / Measurement of E-UTRA cells / RSRQ based measurements | X | | - |
| 8.1.3.2.4.NR5GC | Measurement configuration control and reporting / Inter-RAT measurements / Event B2 / Measurement of E-UTRA cells / SINR based measurements | X | | - |
| 8.1.3.3.1.NR5GC | Measurement configuration control and reporting / CGI reporting of NR cell | X | | - |
| 8.1.3.3.2.NR5GC | Measurement configuration control and reporting / CGI reporting of E-UTRA cell | X | | - |
| 8.1.4.1.2.NR5GC | Intra NR handover / Success / Inter-frequency | X | | - |
| 8.1.4.1.6.NR5GC | Intra NR handover / Failure / Re-establishment failure | X | | - |
| 8.1.4.1.7.1.NR5GC | NR CA / Intra NR handover / Success / PCell Change and SCell addition / SCell release / Intra-band Contiguous CA | X | | - |
| 8.1.4.1.7.2.NR5GC | NR CA / Intra NR handover / Success / PCell Change and SCell addition / SCell release / Inter-band CA | X | | |
| 8.1.4.2.1.1.NR5GC | Inter-RAT handover / From NR to E-UTRA / Success | X | | - |
| 8.1.4.2.2.1.NR5GC | Inter-RAT handover / From E-UTRA to NR / Success | X | | - |
| 8.1.5.1.1.NR5GC | UE capability transfer / Success | X | | - |
| 8.1.5.2.1.NR5GC | SI change / Notification of BCCH modification / Short message for SI update | X | | - |
| 8.1.5.2.2.NR5GC | SI change / Notification of BCCH modification / Short message for SI update in NR RRC_CONNECTED state | X | | - |
| 8.1.5.3.1.NR5GC | PWS notification / PWS reception in NR RRC_IDLE state | X | | |
| 8.1.5.3.2.NR5GC | PWS notification / PWS reception in NR RRC_INACTIVE state | X | | - |
| 8.1.5.3.3.NR5GC | PWS notification / PWS reception in NR RRC_CONNECTED state | X | | - |
| 8.1.5.3.4.NR5GC | PWS notification / PWS reception using dedicatedSystemInformationDelivery | X | | - |
| 8.1.5.4.1.NR5GC | Counter check / Reception of CounterCheck message by the UE | X | | - |
| 8.1.5.5.1.NR5GC | Redirection to NR / From E-UTRA / Success | X | | - |
| 8.1.5.6.3.NR5GC | Radio link failure / T311 expiry | X | | - |
| 8.1.5.6.5.1.NR5GC | NR CA / No Radio Link Failure on SCell / RRC Connection Continues on PCell / Intra-band Contiguous CA | X | | - |
| 8.1.5.6.5.2.NR5GC | NR CA / No Radio Link Failure on SCell / RRC Connection Continues on PCell / Inter-band CA | X | | - |
| 8.1.5.6.5.3.NR5GC | NR CA / No Radio Link Failure on SCell / RRC Connection Continues on PCell / Intra-band non-Contiguous CA | X | | - |
| 9.1.1.1.NR5GC | EAP based primary authentication and key agreement / EAP-AKA' related procedures | X | | - |
| 9.1.1.2.NR5GC | EAP based primary authentication and key agreement / Reject | X | | - |
| 9.1.1.3.NR5GC | EAP based primary authentication and key agreement / EAP message transport / Abnormal | X | | - |
| 9.1.1.4.NR5GC | 5G AKA based primary authentication and key agreement / 5G-AKA related procedures | X | | - |
| 9.1.1.5.NR5GC | 5G AKA based primary authentication and key agreement / Reject | X | | |
| 9.1.1.6.NR5GC | 5G AKA based primary authentication and key agreement / Abnormal | X | | - |
| 9.1.2.1.NR5GC | NAS security mode command | X | | - |
| 9.1.2.2.NR5GC | Protection of initial NAS signalling messages | X | | - |
| 9.1.2.3.NR5GC | Integrity protection / Correct functionality of 5G NAS integrity algorithm / SNOW3G | X | | - |
| 9.1.2.4.NR5GC | Integrity protection / Correct functionality of 5G NAS integrity algorithm / AES | X | | - |
| 9.1.2.5.NR5GC | Integrity protection / Correct functionality of 5G NAS integrity algorithm / ZUC | X | | - |

| | | | | |
|---|---|---|---|---|
| 9.1.2.6.NR5GC | Ciphering and deciphering / Correct functionality of 5G NAS encryption algorithm / SNOW3G | X | | - |
| 9.1.2.7.NR5GC | Ciphering and deciphering / Correct functionality of 5G NAS encryption algorithm / AES | X | | - |
| 9.1.2.8.NR5GC | Ciphering and deciphering / Correct functionality of 5G NAS encryption algorithm / ZUC | X | | - |
| 9.1.3.1.NR5GC | Identification procedure | X | | - |
| 9.1.4.1.NR5GC | Generic UE configuration update / New 5G-GUTI, NITZ, registration requested, Network slicing indication, New Allowed NSSAI / acknowledgement from the UE | X | | - |
| 9.1.5.1.1.NR5GC | Initial registration / Success / 5G-GUTI reallocation, Last visited TAI | X | | - |
| 9.1.5.1.2.NR5GC | Initial registration / 5GS services / Equivalent PLMN list handling | X | | - |
| 9.1.5.1.3.NR5GC | Initial registration / 5GS services / NSSAI handling | X | | - |
| 9.1.5.1.3a.NR5GC | Initial registration / 5GS services / NSSAI handling / NSSAI Storage | X | | - |
| 9.1.5.1.5.NR5GC | Initial registration / Abnormal / Failure after 5 attempts | X | | - |
| 9.1.5.1.6.NR5GC | Initial registration / Rejected / Illegal UE | X | | - |
| 9.1.5.1.8.NR5GC | Initial registration / Rejected / Serving network not authorized | X | | - |
| 9.1.5.1.9.NR5GC | Initial registration / Abnormal / Change of cell into a new tracking area | X | | - |
| 9.1.5.1.10.NR5GC | Initial registration / Rejected / PLMN not allowed | X | | - |
| 9.1.5.1.11.NR5GC | Initial registration / Rejected / Tracking area not allowed | X | | - |
| 9.1.5.1.12.NR5GC | Initial registration / Rejected / Roaming not allowed in this tracking area | X | | - |
| 9.1.5.1.13.NR5GC | Initial registration / Rejected / No suitable cells in tracking area | X | | - |
| 9.1.5.1.14.NR5GC | Initial registration / Rejected / Congestion / Abnormal cases / T3346 | X | | - |
| 9.1.5.2.1.NR5GC | Mobility registration update / TAI list handling | X | | - |
| 9.1.5.2.2.NR5GC | Periodic registration update / Accepted | X | | - |
| 9.1.5.2.4.NR5GC | Mobility registration update / The lower layer requests NAS signalling connection recovery | X | | - |
| 9.1.5.2.6.NR5GC | Mobility registration update / Registered slice(s) change | X | | - |
| 9.1.5.2.7.NR5GC | Mobility and periodic registration update / Rejected / UE identity cannot be derived by the network | X | | - |
| 9.1.5.2.8.NR5GC | Mobility and periodic registration update / Rejected / implicitly de-registered | X | | - |
| 9.1.5.2.9.NR5GC | Mobility and periodic registration update / Abnormal / Change of cell into a new tracking area, collision with generic UE configuration update procedure | X | | - |
| 9.1.6.1.1.NR5GC | UE-initiated de-registration / switch off / Abnormal / De-registration and 5GMM common procedure collision | X | | - |
| 9.1.6.1.2.NR5GC | UE-initiated de-registration / normal de-registration / Abnormal / Transmission failure without TAI change from lower layers, De-registration and 5GMM common procedure collision, T3521 timeout | X | | - |
| 9.1.6.1.3.NR5GC | UE-initiated de-registration / Abnormal / Change of cell into a new tracking area | X | | - |
| 9.1.6.1.4.NR5GC | UE-initiated de-registration / Abnormal / Transmission failure with TAI change from lower layers | X | | - |
| 9.1.6.2.1.NR5GC | Network-initiated de-registration / de-registration for 3GPP access / re-registration required | X | | - |
| 9.1.6.2.2.NR5GC | Network-initiated de-registration / de-registration for 3GPP access / re-registration not required | X | | - |
| 9.1.7.1.NR5GC | Service request / IDLE mode uplink user data transport / Rejected / Restricted service area, Abnormal / T3517 / T3525 | X | | - |
| 9.1.7.2.NR5GC | Service request / CONNECTED mode user data transport / Abnormal / T3517 | X | | - |
| 9.1.8.1.NR5GC | SMS over NAS / MO and MT SMS over NAS - Idle mode | X | | - |
| 9.1.8.2.NR5GC | SMS over NAS / Multiple MO and MT SMS over NAS - CONNECTED mode | X | | - |
| 9.3.1.1.NR5GC | Inter-system mobility registration update / Single-registration mode with N26 / 5GMM-IDLE / 5GC to EPC | X | | - |
| 9.3.1.2.NR5GC | Inter-system mobility registration update / Single-registration mode with N26 / 5GMM-IDLE / EPC to 5GC | X | | - |
| 9.3.1.3.NR5GC | Inter-system mobility and periodic registration update / Rejected / Single-registration mode with N26 / Handling of EPC relevant parameters | X | | - |
| 10.1.1.1.NR5GC | PDU session authentication and authorization / During the UE-requested PDU session procedure | X | | - |
| 10.1.1.2.NR5GC | PDU session authentication and authorization / After the UE-requested PDU session procedure | X | | - |
| 10.1.2.1.NR5GC | Network-requested PDU session modification / Accepted | X | | - |
| 10.1.3.2.NR5GC | Network-requested PDU session release / Accepted / Insufficient resources / T3396, Accepted / Insufficient resources for specific slice and DNN / T3584, Abnormal / No | X | | - |

| | | | | |
|---|---|---|---|---|
| | PDU session context active for the received PDU session ID | | | |
| 10.1.4.1.NR5GC | UE-requested PDU session establishment / Abnormal / T3580 | X | | - |
| 10.1.5.1.NR5GC | UE-requested PDU session modification | X | | - |
| 10.1.2.2.NR5GC | Network-requested PDU session modification / Abnormal / PDU session in state PDU SESSION INACTIVE | X | | - |
| 10.1.6.1.NR5GC | UE-requested PDU session release / Abnormal / collision with network-requested PDU session modification procedure | X | | - |
| 10.1.6.2.NR5GC | UE-requested PDU session release / Abnormal / collision with network-requested PDU session release procedure | X | | - |
| 11.3.3.NR5GC | UAC / Access Identity 0 / AC8 / RRC_INACTIVE / RNAUpdate/RRC Resume | X | | - |
| 11.3.4.NR5GC | UAC / Access Identity 0 / Registration procedure for mobility and periodic registration update / BarringPerPLMN/Implicit AC Barring List | X | | - |

# Annex B: NR TBS tables

## B.1 Downlink TBS (normative)

The tables in this clause are depending on parameters provided by RRC signalling as described in subclause 7.1.2.2.4.1. $L_{RBs}$ is limited according to the DL scheduling scheme in subclause 7.1.2.2.3.

### B.1.1 Downlink TBS using MCS index table 5.1.3.1-1

#### B.1.1.1 Downlink TBS using MCS index table 5.1.3.1-1, dmrs-AdditionalPosition = 0, number of CDM groups = 1

**Table B.1.1.1-1: Void**

**Table B.1.1.1-2: Void**

**Table B.1.1.1-3: TBS for PDSCH using MCS index table 5.1.3.1-1 with dmrs-AdditionalPosition = 0, number of CDM groups = 1, PDSCH-duration = 12**

| TBS | $L_{RBs}$ | $I_{MCS}$ | TBS | $L_{RBs}$ | $I_{MCS}$ | TBS | $L_{RBs}$ | $I_{MCS}$ | TBS | $L_{RBs}$ | $I_{MCS}$ |
|---|---|---|---|---|---|---|---|---|---|---|---|
| 32 | 1 | 0 | 576 | 11 | 2 | 2216 | 12 | 9 | 5760 | 10 | 23 |
| 40 | 1 | 1 | 608 | 14 | 1 | 2280 | 16 | 7 | 5888 | 14 | 19 |
| 48 | 1 | 2 | 640 | 15 | 1 | 2408 | 17 | 7 | 6016 | 17 | 16 |
| 64 | 2 | 0 | 672 | 16 | 1 | 2472 | 15 | 8 | 6144 | 8 | 28 |
| 80 | 2 | 1 | 704 | 5 | 7 | 2536 | 6 | 19 | 6272 | 15 | 19 |
| 96 | 3 | 0 | 736 | 17 | 1 | 2600 | 16 | 8 | 6400 | 17 | 18 |
| 104 | 2 | 2 | 768 | 11 | 3 | 2664 | 13 | 11 | 6656 | 16 | 19 |
| 120 | 3 | 1 | 808 | 15 | 2 | 2728 | 15 | 9 | 6784 | 11 | 24 |
| 128 | 4 | 0 | 848 | 16 | 2 | 2792 | 17 | 8 | 6912 | 15 | 20 |
| 136 | 1 | 7 | 888 | 17 | 2 | 2856 | 14 | 11 | 7040 | 17 | 19 |
| 152 | 3 | 2 | 928 | 11 | 4 | 2976 | 16 | 9 | 7296 | 16 | 20 |
| 160 | 5 | 0 | 984 | 14 | 3 | 3104 | 17 | 9 | 7424 | 15 | 21 |
| 168 | 4 | 1 | 1032 | 15 | 3 | 3240 | 16 | 11 | 7552 | 14 | 22 |
| 176 | 1 | 9 | 1064 | 4 | 13 | 3368 | 14 | 12 | 7680 | 11 | 26 |
| 192 | 6 | 0 | 1128 | 16 | 3 | 3496 | 17 | 11 | 7808 | 17 | 20 |
| 208 | 5 | 1 | 1160 | 17 | 3 | 3624 | 12 | 14 | 7936 | 16 | 21 |
| 224 | 7 | 0 | 1192 | 5 | 12 | 3752 | 16 | 12 | 8064 | 15 | 22 |
| 240 | 2 | 6 | 1224 | 12 | 5 | 3840 | 13 | 14 | 8456 | 17 | 21 |
| 256 | 8 | 0 | 1256 | 15 | 4 | 3904 | 11 | 16 | 8712 | 16 | 22 |
| 272 | 4 | 3 | 1288 | 9 | 7 | 3968 | 17 | 12 | 9224 | 17 | 22 |
| 288 | 9 | 0 | 1320 | 13 | 5 | 4032 | 7 | 23 | 9480 | 13 | 27 |
| 304 | 7 | 1 | 1352 | 16 | 4 | 4096 | 14 | 14 | 9992 | 17 | 23 |
| 320 | 10 | 0 | 1416 | 17 | 4 | 4224 | 16 | 13 | 10248 | 14 | 27 |
| 336 | 8 | 1 | 1480 | 14 | 5 | 4352 | 13 | 15 | 10504 | 17 | 24 |
| 352 | 11 | 0 | 1544 | 15 | 5 | 4480 | 17 | 13 | 10760 | 14 | 28 |
| 368 | 7 | 2 | 1608 | 13 | 6 | 4608 | 14 | 15 | 11016 | 15 | 27 |
| 384 | 12 | 0 | 1672 | 16 | 5 | 4736 | 16 | 14 | 11272 | 17 | 25 |
| 408 | 6 | 3 | 1736 | 17 | 5 | 4864 | 13 | 18 | 11528 | 15 | 28 |
| 432 | 13 | 0 | 1800 | 11 | 8 | 4992 | 17 | 14 | 11784 | 16 | 27 |
| 456 | 14 | 0 | 1864 | 15 | 6 | 5120 | 7 | 27 | 12040 | 17 | 26 |
| 480 | 15 | 0 | 1928 | 5 | 18 | 5248 | 16 | 15 | 12296 | 16 | 28 |
| 504 | 12 | 1 | 2024 | 16 | 6 | 5376 | 13 | 19 | 12552 | 17 | 27 |
| 528 | 16 | 0 | 2088 | 17 | 6 | 5504 | 12 | 20 | 13064 | 17 | 28 |
| 552 | 17 | 0 | 2152 | 15 | 7 | 5632 | 17 | 15 | | | |

### B.1.1.2 Downlink TBS using MCS index table 5.1.3.1-1, dmrs-AdditionalPosition = 1, number of CDM groups = 1

**Table B.1.1.2-1: Void**

**Table B.1.1.2-2: Void**

**Table B.1.1.2-3: TBS for PDSCH using MCS index table 5.1.3.1-1 with dmrs-AdditionalPosition = 1, number of CDM groups = 1, PDSCH-duration = 12**

| TBS | $L_{RBs}$ | $I_{MCS}$ | TBS | $L_{RBs}$ | $I_{MCS}$ | TBS | $L_{RBs}$ | $I_{MCS}$ | TBS | $L_{RBs}$ | $I_{MCS}$ |
|---|---|---|---|---|---|---|---|---|---|---|---|
| 24 | 1 | 0 | 552 | 11 | 2 | 2280 | 13 | 9 | 6016 | 15 | 19 |
| 40 | 1 | 1 | 576 | 14 | 1 | 2408 | 17 | 7 | 6144 | 17 | 18 |
| 48 | 1 | 2 | 608 | 15 | 1 | 2472 | 16 | 8 | 6272 | 10 | 25 |
| 56 | 2 | 0 | 640 | 16 | 1 | 2536 | 13 | 11 | 6400 | 16 | 19 |
| 64 | 1 | 3 | 672 | 5 | 7 | 2600 | 9 | 14 | 6528 | 15 | 20 |
| 72 | 1 | 4 | 704 | 17 | 1 | 2664 | 17 | 8 | 6656 | 14 | 21 |
| 80 | 2 | 1 | 736 | 9 | 4 | 2728 | 14 | 11 | 6784 | 17 | 19 |
| 88 | 3 | 0 | 768 | 15 | 2 | 2792 | 16 | 9 | 6912 | 11 | 25 |
| 96 | 2 | 2 | 808 | 16 | 2 | 2856 | 10 | 14 | 7040 | 16 | 20 |
| 112 | 1 | 6 | 848 | 17 | 2 | 2976 | 17 | 9 | 7168 | 15 | 21 |
| 120 | 4 | 0 | 888 | 11 | 4 | 3104 | 16 | 11 | 7296 | 10 | 28 |
| 128 | 2 | 3 | 928 | 14 | 3 | 3240 | 11 | 14 | 7424 | 17 | 20 |
| 144 | 3 | 2 | 984 | 15 | 3 | 3368 | 17 | 11 | 7552 | 16 | 21 |
| 152 | 5 | 0 | 1032 | 16 | 3 | 3496 | 12 | 14 | 7680 | 15 | 22 |
| 160 | 4 | 1 | 1064 | 9 | 6 | 3624 | 16 | 12 | 7808 | 14 | 23 |
| 168 | 1 | 9 | 1128 | 17 | 3 | 3752 | 13 | 14 | 8064 | 17 | 21 |
| 184 | 6 | 0 | 1160 | 10 | 6 | 3824 | 17 | 12 | 8192 | 16 | 22 |
| 192 | 4 | 2 | 1192 | 15 | 4 | 3840 | 7 | 23 | 8456 | 14 | 24 |
| 208 | 5 | 1 | 1224 | 9 | 7 | 3904 | 9 | 20 | 8712 | 17 | 22 |
| 224 | 7 | 0 | 1256 | 8 | 8 | 3968 | 14 | 14 | 8968 | 16 | 23 |
| 240 | 8 | 0 | 1288 | 16 | 4 | 4032 | 16 | 13 | 9224 | 13 | 27 |
| 256 | 5 | 2 | 1320 | 3 | 20 | 4096 | 13 | 15 | 9480 | 17 | 23 |
| 272 | 9 | 0 | 1352 | 17 | 4 | 4224 | 17 | 13 | 9736 | 14 | 27 |
| 288 | 7 | 1 | 1416 | 14 | 5 | 4352 | 13 | 16 | 9992 | 15 | 26 |
| 304 | 10 | 0 | 1480 | 15 | 5 | 4480 | 16 | 14 | 10248 | 17 | 24 |
| 320 | 8 | 1 | 1544 | 13 | 6 | 4608 | 13 | 18 | 10504 | 15 | 27 |
| 336 | 11 | 0 | 1608 | 16 | 5 | 4736 | 15 | 15 | 10760 | 17 | 25 |
| 352 | 7 | 2 | 1672 | 17 | 5 | 4864 | 17 | 14 | 11016 | 15 | 28 |
| 368 | 12 | 0 | 1736 | 15 | 6 | 4992 | 14 | 18 | 11272 | 16 | 27 |
| 384 | 6 | 3 | 1800 | 13 | 7 | 5120 | 16 | 15 | 11528 | 17 | 26 |
| 408 | 13 | 0 | 1864 | 16 | 6 | 5248 | 12 | 20 | 11784 | 16 | 28 |
| 432 | 14 | 0 | 1928 | 14 | 7 | 5376 | 17 | 15 | 12040 | 17 | 27 |
| 456 | 11 | 1 | 2024 | 17 | 6 | 5504 | 10 | 23 | 12552 | 17 | 28 |
| 480 | 15 | 0 | 2088 | 15 | 7 | 5632 | 14 | 19 | | | |
| 504 | 16 | 0 | 2152 | 16 | 7 | 5760 | 17 | 16 | | | |
| 528 | 17 | 0 | 2216 | 10 | 12 | 5888 | 10 | 24 | | | |

### B.1.1.3 Downlink TBS using MCS index table 5.1.3.1-1, dmrs-AdditionalPosition = 2, number of CDM groups = 2, modulation order <= 2

NOTE: The major purpose of the tables in this clause is to cope with PDSCH transmissions being restricted to $Q_m$ <= 2 (QPSK) like PDSCH transmissions being scheduled with P-RNTI, RA-RNTI, SI-RNTI (see TS 38.214 clause 5.1.3.1 [22]).

**Table B.1.1.3-1: Void**

**Table B.1.1.3-2: Void**

**Table B.1.1.3-3: TBS for PDSCH using MCS index table 5.1.3.1-1 with dmrs-AdditionalPosition = 2, number of CDM groups = 2, modulation order <= 2, PDSCH-duration = 12**

| TBS | $L_{RBs}$ | $I_{MCS}$ | TBS | $L_{RBs}$ | $I_{MCS}$ | TBS | $L_{RBs}$ | $I_{MCS}$ | TBS | $L_{RBs}$ | $I_{MCS}$ |
|---|---|---|---|---|---|---|---|---|---|---|---|
| 24 | 1 | 0 | 128 | 4 | 1 | 256 | 4 | 4 | 504 | 4 | 8 |
| 32 | 1 | 1 | 136 | 1 | 9 | 272 | 5 | 3 | 552 | 7 | 5 |
| 40 | 1 | 2 | 144 | 6 | 0 | 288 | 7 | 2 | 576 | 6 | 6 |
| 48 | 2 | 0 | 152 | 3 | 3 | 320 | 6 | 3 | 640 | 5 | 8 |
| 64 | 2 | 1 | 160 | 5 | 1 | 336 | 3 | 7 | 672 | 7 | 6 |
| 72 | 3 | 0 | 176 | 7 | 0 | 368 | 7 | 3 | 736 | 5 | 9 |
| 80 | 2 | 2 | 184 | 2 | 6 | 384 | 6 | 4 | 768 | 6 | 8 |
| 88 | 1 | 6 | 192 | 6 | 1 | 408 | 5 | 5 | 808 | 7 | 7 |
| 96 | 4 | 0 | 208 | 5 | 2 | 432 | 3 | 9 | 888 | 7 | 8 |
| 104 | 2 | 3 | 224 | 7 | 1 | 456 | 7 | 4 | 1032 | 7 | 9 |
| 120 | 5 | 0 | 240 | 6 | 2 | 480 | 6 | 5 | | | |

### B.1.1.4 Downlink TBS using MCS index table 5.1.3.1-1, dmrs-AdditionalPosition = 2, number of CDM groups = 2

**Table B.1.1.4-1: Void**

**Table B.1.1.4-2: Void**

**Table B.1.1.4-3: TBS for PDSCH using MCS index table 5.1.3.1-1 with dmrs-AdditionalPosition = 2, number of CDM groups = 2, PDSCH-duration = 12**

| TBS | $L_{RBs}$ | $I_{MCS}$ | TBS | $L_{RBs}$ | $I_{MCS}$ | TBS | $L_{RBs}$ | $I_{MCS}$ | TBS | $L_{RBs}$ | $I_{MCS}$ |
|---|---|---|---|---|---|---|---|---|---|---|---|
| 24 | 1 | 0 | 456 | 14 | 1 | 1800 | 16 | 7 | 4736 | 17 | 16 |
| 32 | 1 | 1 | 480 | 9 | 3 | 1864 | 13 | 9 | 4864 | 15 | 19 |
| 40 | 1 | 2 | 504 | 15 | 1 | 1928 | 17 | 7 | 4992 | 17 | 18 |
| 48 | 2 | 0 | 528 | 16 | 1 | 2024 | 16 | 8 | 5120 | 10 | 25 |
| 64 | 2 | 1 | 552 | 7 | 5 | 2088 | 13 | 11 | 5248 | 16 | 19 |
| 72 | 3 | 0 | 576 | 17 | 1 | 2152 | 17 | 8 | 5376 | 15 | 20 |
| 80 | 2 | 2 | 608 | 15 | 2 | 2216 | 14 | 11 | 5504 | 17 | 19 |
| 88 | 1 | 6 | 640 | 12 | 3 | 2280 | 16 | 9 | 5760 | 16 | 20 |
| 96 | 4 | 0 | 672 | 16 | 2 | 2408 | 15 | 11 | 5888 | 14 | 22 |
| 104 | 2 | 3 | 704 | 17 | 2 | 2472 | 17 | 9 | 6016 | 17 | 20 |
| 120 | 5 | 0 | 736 | 14 | 3 | 2536 | 16 | 11 | 6272 | 16 | 21 |
| 128 | 4 | 1 | 768 | 8 | 6 | 2600 | 14 | 12 | 6400 | 14 | 23 |
| 136 | 1 | 9 | 808 | 15 | 3 | 2664 | 13 | 13 | 6528 | 11 | 28 |
| 144 | 6 | 0 | 848 | 16 | 3 | 2728 | 17 | 11 | 6656 | 17 | 21 |
| 152 | 3 | 3 | 888 | 11 | 5 | 2792 | 12 | 14 | 6784 | 15 | 23 |
| 160 | 5 | 1 | 928 | 17 | 3 | 2856 | 11 | 15 | 6912 | 12 | 27 |
| 176 | 7 | 0 | 984 | 15 | 4 | 2976 | 16 | 12 | 7168 | 17 | 22 |
| 184 | 2 | 6 | 1032 | 16 | 4 | 3104 | 17 | 12 | 7296 | 16 | 23 |
| 192 | 6 | 1 | 1064 | 11 | 6 | 3240 | 11 | 18 | 7424 | 13 | 27 |
| 208 | 8 | 0 | 1128 | 17 | 4 | 3368 | 16 | 13 | 7680 | 17 | 23 |
| 224 | 9 | 0 | 1160 | 12 | 6 | 3496 | 17 | 13 | 7808 | 16 | 24 |
| 240 | 6 | 2 | 1192 | 15 | 5 | 3624 | 14 | 15 | 8064 | 14 | 27 |
| 256 | 10 | 0 | 1224 | 13 | 6 | 3752 | 16 | 14 | 8192 | 17 | 24 |
| 272 | 11 | 0 | 1256 | 6 | 13 | 3824 | 9 | 22 | 8456 | 14 | 28 |
| 288 | 7 | 2 | 1288 | 16 | 5 | 3840 | 14 | 16 | 8712 | 17 | 25 |
| 304 | 12 | 0 | 1320 | 14 | 6 | 3904 | 15 | 15 | 8968 | 15 | 28 |
| 320 | 8 | 2 | 1352 | 17 | 5 | 3968 | 17 | 14 | 9224 | 16 | 27 |
| 336 | 13 | 0 | 1416 | 15 | 6 | 4032 | 7 | 27 | 9480 | 17 | 26 |
| 352 | 14 | 0 | 1480 | 13 | 7 | 4096 | 16 | 15 | 9736 | 17 | 27 |
| 368 | 11 | 1 | 1544 | 16 | 6 | 4224 | 13 | 19 | 10248 | 17 | 28 |
| 384 | 15 | 0 | 1608 | 17 | 6 | 4352 | 17 | 15 | | | |
| 408 | 16 | 0 | 1672 | 15 | 7 | 4480 | 16 | 16 | | | |
| 432 | 17 | 0 | 1736 | 12 | 9 | 4608 | 14 | 19 | | | |

## B.1.2 Void

# B.2 Uplink TBS (informative)

The tables in this clause are depending on parameters provided by RRC signalling as described in subclause 7.1.2.3.2. $L_{RBs}$ is limited to the minimum value of $N_{BWP}$=24 in accordance to Table 5.3.2-1 of TS 38.101-1/2 [5, 6].

For selection of the $\mathbf{L_{RBs}}$ **/** $\mathbf{I_{MCS}}$ pair for a particular TBS, the same criteria are applied, as specified for the DL in subclause 7.1.2.2.4.2 paragraph '$\mathbf{L_{RBs}}$ **/** $\mathbf{I_{MCS}}$ pair determination'.

# B.2.1 Uplink TBS using MCS index table 5.1.3.1-1

## B.2.1.1 Uplink TBS using MCS index table 5.1.3.1-1, dmrs-AdditionalPosition = 0, number of CDM groups = 1

**Table B.2.1.1-1: TBS for PUSCH using MCS index table 5.1.3.1-1 with dmrs-AdditionalPosition = 0, number of CDM groups = 1, PUSCH-duration = 14**

| TBS | $L_{RBs}$ | $I_{MCS}$ | TBS | $L_{RBs}$ | $I_{MCS}$ | TBS | $L_{RBs}$ | $I_{MCS}$ | TBS | $L_{RBs}$ | $I_{MCS}$ |
|---|---|---|---|---|---|---|---|---|---|---|---|
| 32 | 1 | 0 | 848 | 23 | 0 | 3496 | 19 | 8 | 8192 | 22 | 15 |
| 40 | 1 | 1 | 888 | 24 | 0 | 3624 | 22 | 7 | 8456 | 21 | 16 |
| 56 | 1 | 2 | 928 | 19 | 1 | 3752 | 23 | 7 | 8712 | 23 | 15 |
| 72 | 2 | 0 | 984 | 20 | 1 | 3824 | 8 | 19 | 8968 | 24 | 15 |
| 88 | 2 | 1 | 1032 | 21 | 1 | 3840 | 24 | 7 | 9224 | 23 | 16 |
| 104 | 3 | 0 | 1064 | 22 | 1 | 3904 | 19 | 9 | 9480 | 24 | 16 |
| 112 | 2 | 2 | 1128 | 23 | 1 | 3968 | 15 | 12 | 9736 | 23 | 18 |
| 136 | 3 | 1 | 1160 | 24 | 1 | 4032 | 22 | 8 | 9992 | 21 | 19 |
| 144 | 4 | 0 | 1192 | 20 | 2 | 4096 | 20 | 9 | 10248 | 24 | 18 |
| 152 | 2 | 3 | 1224 | 16 | 3 | 4224 | 23 | 8 | 10504 | 22 | 19 |
| 160 | 1 | 7 | 1256 | 21 | 2 | 4352 | 24 | 8 | 10760 | 23 | 19 |
| 176 | 5 | 0 | 1288 | 22 | 2 | 4480 | 22 | 9 | 11016 | 18 | 22 |
| 184 | 4 | 1 | 1320 | 17 | 3 | 4608 | 20 | 11 | 11272 | 24 | 19 |
| 208 | 1 | 9 | 1352 | 23 | 2 | 4736 | 23 | 9 | 11528 | 19 | 22 |
| 224 | 6 | 0 | 1416 | 24 | 2 | 4864 | 21 | 11 | 11784 | 23 | 20 |
| 240 | 5 | 1 | 1480 | 19 | 3 | 4992 | 24 | 9 | 12040 | 20 | 22 |
| 256 | 7 | 0 | 1544 | 20 | 3 | 5120 | 13 | 17 | 12296 | 24 | 20 |
| 272 | 2 | 6 | 1608 | 21 | 3 | 5248 | 23 | 11 | 12552 | 19 | 23 |
| 288 | 8 | 0 | 1672 | 14 | 5 | 5376 | 18 | 13 | 12808 | 23 | 21 |
| 304 | 4 | 3 | 1736 | 22 | 3 | 5504 | 24 | 11 | 13064 | 20 | 23 |
| 320 | 2 | 7 | 1800 | 23 | 3 | 5632 | 19 | 13 | 13320 | 22 | 22 |
| 336 | 9 | 0 | 1864 | 24 | 3 | 5760 | 22 | 12 | 13576 | 24 | 21 |
| 352 | 6 | 2 | 1928 | 20 | 4 | 5888 | 20 | 13 | 13832 | 21 | 23 |
| 368 | 10 | 0 | 2024 | 21 | 4 | 6016 | 23 | 12 | 14088 | 23 | 22 |
| 384 | 8 | 1 | 2088 | 22 | 4 | 6144 | 13 | 19 | 14344 | 22 | 23 |
| 408 | 11 | 0 | 2152 | 23 | 4 | 6272 | 24 | 12 | 14600 | 24 | 22 |
| 432 | 12 | 0 | 2216 | 19 | 5 | 6400 | 19 | 14 | 14856 | 21 | 24 |
| 456 | 6 | 3 | 2280 | 24 | 4 | 6528 | 22 | 13 | 15112 | 23 | 23 |
| 480 | 13 | 0 | 2408 | 21 | 5 | 6656 | 20 | 14 | 15624 | 22 | 24 |
| 504 | 14 | 0 | 2472 | 18 | 6 | 6784 | 23 | 13 | 15880 | 24 | 23 |
| 528 | 11 | 1 | 2536 | 22 | 5 | 6912 | 8 | 28 | 16136 | 23 | 24 |
| 552 | 15 | 0 | 2600 | 19 | 6 | 7040 | 21 | 14 | 16392 | 22 | 25 |
| 576 | 12 | 1 | 2664 | 23 | 5 | 7168 | 24 | 13 | 16896 | 24 | 24 |
| 608 | 16 | 0 | 2728 | 20 | 6 | 7296 | 13 | 21 | 17424 | 23 | 25 |
| 640 | 17 | 0 | 2792 | 24 | 5 | 7424 | 22 | 14 | 17928 | 24 | 25 |
| 672 | 18 | 0 | 2856 | 21 | 6 | 7552 | 19 | 16 | 18432 | 23 | 26 |
| 704 | 19 | 0 | 2976 | 18 | 7 | 7680 | 23 | 14 | 18960 | 24 | 26 |
| 736 | 20 | 0 | 3104 | 22 | 6 | 7808 | 21 | 15 | 19968 | 24 | 27 |
| 768 | 21 | 0 | 3240 | 23 | 6 | 7936 | 20 | 16 | 21000 | 24 | 28 |
| 808 | 22 | 0 | 3368 | 24 | 6 | 8064 | 24 | 14 | | | |

**Table B.2.1.1-2: Void**

### B.2.1.2 Uplink TBS using MCS index table 5.1.3.1-1, dmrs-AdditionalPosition = 1, number of CDM groups = 1

**Table B.2.1.2-1: TBS for PUSCH using MCS index table 5.1.3.1-1 with dmrs-AdditionalPosition = 1, number of CDM groups = 1, PUSCH-duration = 14**

| TBS | $L_{RBs}$ | $I_{MCS}$ | TBS | $L_{RBs}$ | $I_{MCS}$ | TBS | $L_{RBs}$ | $I_{MCS}$ | TBS | $L_{RBs}$ | $I_{MCS}$ |
|---|---|---|---|---|---|---|---|---|---|---|---|
| 32 | 1 | 0 | 848 | 23 | 0 | 3496 | 19 | 8 | 8192 | 22 | 15 |
| 40 | 1 | 1 | 888 | 24 | 0 | 3624 | 22 | 7 | 8456 | 21 | 16 |
| 56 | 1 | 2 | 928 | 19 | 1 | 3752 | 23 | 7 | 8712 | 23 | 15 |
| 72 | 2 | 0 | 984 | 20 | 1 | 3824 | 8 | 19 | 8968 | 24 | 15 |
| 88 | 2 | 1 | 1032 | 21 | 1 | 3840 | 24 | 7 | 9224 | 23 | 16 |
| 104 | 3 | 0 | 1064 | 22 | 1 | 3904 | 19 | 9 | 9480 | 24 | 16 |
| 112 | 2 | 2 | 1128 | 23 | 1 | 3968 | 15 | 12 | 9736 | 23 | 18 |
| 136 | 3 | 1 | 1160 | 24 | 1 | 4032 | 22 | 8 | 9992 | 21 | 19 |
| 144 | 4 | 0 | 1192 | 20 | 2 | 4096 | 20 | 9 | 10248 | 24 | 18 |
| 152 | 2 | 3 | 1224 | 16 | 3 | 4224 | 23 | 8 | 10504 | 22 | 19 |
| 160 | 1 | 7 | 1256 | 21 | 2 | 4352 | 24 | 8 | 10760 | 23 | 19 |
| 176 | 5 | 0 | 1288 | 22 | 2 | 4480 | 22 | 9 | 11016 | 18 | 22 |
| 184 | 4 | 1 | 1320 | 17 | 3 | 4608 | 20 | 11 | 11272 | 24 | 19 |
| 208 | 1 | 9 | 1352 | 23 | 2 | 4736 | 23 | 9 | 11528 | 19 | 22 |
| 224 | 6 | 0 | 1416 | 24 | 2 | 4864 | 21 | 11 | 11784 | 23 | 20 |
| 240 | 5 | 1 | 1480 | 19 | 3 | 4992 | 24 | 9 | 12040 | 20 | 22 |
| 256 | 7 | 0 | 1544 | 20 | 3 | 5120 | 13 | 17 | 12296 | 24 | 20 |
| 272 | 2 | 6 | 1608 | 21 | 3 | 5248 | 23 | 11 | 12552 | 19 | 23 |
| 288 | 8 | 0 | 1672 | 14 | 5 | 5376 | 18 | 13 | 12808 | 23 | 21 |
| 304 | 4 | 3 | 1736 | 22 | 3 | 5504 | 24 | 11 | 13064 | 20 | 23 |
| 320 | 2 | 7 | 1800 | 23 | 3 | 5632 | 19 | 13 | 13320 | 22 | 22 |
| 336 | 9 | 0 | 1864 | 24 | 3 | 5760 | 22 | 12 | 13576 | 24 | 21 |
| 352 | 6 | 2 | 1928 | 20 | 4 | 5888 | 20 | 13 | 13832 | 21 | 23 |
| 368 | 10 | 0 | 2024 | 21 | 4 | 6016 | 23 | 12 | 14088 | 23 | 22 |
| 384 | 8 | 1 | 2088 | 22 | 4 | 6144 | 13 | 19 | 14344 | 22 | 23 |
| 408 | 11 | 0 | 2152 | 23 | 4 | 6272 | 24 | 12 | 14600 | 24 | 22 |
| 432 | 12 | 0 | 2216 | 19 | 5 | 6400 | 19 | 14 | 14856 | 21 | 24 |
| 456 | 6 | 3 | 2280 | 24 | 4 | 6528 | 22 | 13 | 15112 | 23 | 23 |
| 480 | 13 | 0 | 2408 | 21 | 5 | 6656 | 20 | 14 | 15624 | 22 | 24 |
| 504 | 14 | 0 | 2472 | 18 | 6 | 6784 | 23 | 13 | 15880 | 24 | 23 |
| 528 | 11 | 1 | 2536 | 22 | 5 | 6912 | 8 | 28 | 16136 | 23 | 24 |
| 552 | 15 | 0 | 2600 | 19 | 6 | 7040 | 21 | 14 | 16392 | 22 | 25 |
| 576 | 12 | 1 | 2664 | 23 | 5 | 7168 | 24 | 13 | 16896 | 24 | 24 |
| 608 | 16 | 0 | 2728 | 20 | 6 | 7296 | 13 | 21 | 17424 | 23 | 25 |
| 640 | 17 | 0 | 2792 | 24 | 5 | 7424 | 22 | 14 | 17928 | 24 | 25 |
| 672 | 18 | 0 | 2856 | 21 | 6 | 7552 | 19 | 16 | 18432 | 23 | 26 |
| 704 | 19 | 0 | 2976 | 18 | 7 | 7680 | 23 | 14 | 18960 | 24 | 26 |
| 736 | 20 | 0 | 3104 | 22 | 6 | 7808 | 21 | 15 | 19968 | 24 | 27 |
| 768 | 21 | 0 | 3240 | 23 | 6 | 7936 | 20 | 16 | 21000 | 24 | 28 |
| 808 | 22 | 0 | 3368 | 24 | 6 | 8064 | 24 | 14 | | | |

**Table B.2.1.2-2: Void**

## B.2.1.3 Void

## B.2.1.4 Void

## B.2.1.5 Uplink TBS using MCS index table 5.1.3.1-1, dmrs-AdditionalPosition = 2, number of CDM groups = 2

**Table B.2.1.5-1: TBS for PUSCH using MCS index table 5.1.3.1-1 with dmrs-AdditionalPosition = 2, number of CDM groups = 2, PUSCH-duration = 14**

| TBS | $L_{RBs}$ | $I_{MCS}$ | TBS | $L_{RBs}$ | $I_{MCS}$ | TBS | $L_{RBs}$ | $I_{MCS}$ | TBS | $L_{RBs}$ | $I_{MCS}$ |
|---|---|---|---|---|---|---|---|---|---|---|---|
| 24 | 1 | 0 | 672 | 21 | 0 | 2856 | 21 | 7 | 7552 | 24 | 15 |
| 40 | 1 | 1 | 704 | 23 | 0 | 2976 | 22 | 7 | 7680 | 15 | 22 |
| 48 | 1 | 2 | 736 | 24 | 0 | 3104 | 23 | 7 | 7808 | 23 | 16 |
| 56 | 2 | 0 | 768 | 19 | 1 | 3240 | 24 | 7 | 7936 | 22 | 18 |
| 64 | 1 | 3 | 808 | 20 | 1 | 3368 | 19 | 9 | 8064 | 24 | 16 |
| 72 | 1 | 4 | 848 | 21 | 1 | 3496 | 22 | 8 | 8192 | 23 | 18 |
| 80 | 2 | 1 | 888 | 22 | 1 | 3624 | 23 | 8 | 8456 | 21 | 19 |
| 88 | 3 | 0 | 928 | 23 | 1 | 3752 | 24 | 8 | 8712 | 24 | 18 |
| 96 | 2 | 2 | 984 | 24 | 1 | 3824 | 17 | 12 | 8968 | 19 | 21 |
| 112 | 1 | 6 | 1032 | 20 | 2 | 3840 | 22 | 9 | 9224 | 23 | 19 |
| 120 | 4 | 0 | 1064 | 21 | 2 | 3904 | 20 | 11 | 9480 | 24 | 19 |
| 128 | 2 | 3 | 1128 | 22 | 2 | 3968 | 14 | 14 | 9736 | 22 | 20 |
| 144 | 3 | 2 | 1160 | 23 | 2 | 4032 | 23 | 9 | 9992 | 23 | 20 |
| 152 | 5 | 0 | 1192 | 24 | 2 | 4096 | 21 | 11 | 10248 | 20 | 22 |
| 160 | 4 | 1 | 1224 | 19 | 3 | 4224 | 24 | 9 | 10504 | 24 | 20 |
| 168 | 1 | 9 | 1256 | 8 | 8 | 4352 | 13 | 16 | 10760 | 21 | 22 |
| 184 | 6 | 0 | 1288 | 20 | 3 | 4480 | 23 | 11 | 11016 | 23 | 21 |
| 192 | 4 | 2 | 1320 | 3 | 20 | 4608 | 24 | 11 | 11272 | 22 | 22 |
| 208 | 5 | 1 | 1352 | 21 | 3 | 4736 | 21 | 12 | 11528 | 24 | 21 |
| 224 | 7 | 0 | 1416 | 22 | 3 | 4864 | 22 | 12 | 11784 | 23 | 22 |
| 240 | 8 | 0 | 1480 | 18 | 4 | 4992 | 20 | 13 | 12040 | 20 | 24 |
| 256 | 5 | 2 | 1544 | 23 | 3 | 5120 | 23 | 12 | 12296 | 24 | 22 |
| 272 | 9 | 0 | 1608 | 24 | 3 | 5248 | 21 | 13 | 12552 | 21 | 24 |
| 288 | 7 | 1 | 1672 | 21 | 4 | 5376 | 24 | 12 | 12808 | 23 | 23 |
| 304 | 10 | 0 | 1736 | 15 | 6 | 5504 | 22 | 13 | 13064 | 22 | 24 |
| 320 | 8 | 1 | 1800 | 22 | 4 | 5632 | 20 | 14 | 13320 | 24 | 23 |
| 336 | 11 | 0 | 1864 | 23 | 4 | 5760 | 23 | 13 | 13576 | 20 | 26 |
| 352 | 7 | 2 | 1928 | 24 | 4 | 5888 | 10 | 24 | 13832 | 23 | 24 |
| 368 | 12 | 0 | 2024 | 20 | 5 | 6016 | 24 | 13 | 14088 | 22 | 25 |
| 384 | 6 | 3 | 2088 | 21 | 5 | 6144 | 18 | 16 | 14344 | 24 | 24 |
| 408 | 13 | 0 | 2152 | 22 | 5 | 6272 | 22 | 14 | 14600 | 23 | 25 |
| 432 | 14 | 0 | 2216 | 19 | 6 | 6400 | 19 | 16 | 14856 | 22 | 26 |
| 456 | 11 | 1 | 2280 | 23 | 5 | 6528 | 23 | 14 | 15368 | 24 | 25 |
| 480 | 15 | 0 | 2408 | 24 | 5 | 6656 | 21 | 15 | 15624 | 23 | 26 |
| 504 | 16 | 0 | 2472 | 18 | 7 | 6784 | 24 | 14 | 16136 | 24 | 26 |
| 528 | 17 | 0 | 2536 | 22 | 6 | 6912 | 22 | 15 | 16896 | 24 | 27 |
| 552 | 18 | 0 | 2600 | 19 | 7 | 7040 | 21 | 16 | 17424 | 24 | 28 |
| 576 | 14 | 1 | 2664 | 23 | 6 | 7168 | 20 | 18 | | | |
| 608 | 19 | 0 | 2728 | 20 | 7 | 7296 | 23 | 15 | | | |
| 640 | 20 | 0 | 2792 | 24 | 6 | 7424 | 22 | 16 | | | |

**Table B.2.1.5-2: Void**

### B.2.2 Void

### B.2.3 Void

# Annex C (informative): Style guide and design principles

## C.1 Style guide

The style guide specified in TS 36.523-3 [12] Annex B applies to the present document.

## C.2 Design principles

The design principles specified in TS 36.523-3 [12] Annex B apply to the present document.

# Annex D (normative): TTCN-3 definitions

## D.0 Introduction

The present Annex D specifies the TTCN-3 type definitions used at the system interface to configure and control the SS.

In case of discrepancy between the content of the present Annex D and the equivalent TTCN-3 definitions / semantic requirements found in the TTCN modules provided as attachments to the present specification, the latter shall take precedence.

NOTE: This annex is automatically generated from the TTCN-3 modules provided as attachment to the present specification and containing the listed TTCN-3 type definitions.

## D.1 NR_ASP_TypeDefs

Type definitions for configuration of the system simulator;
Common design principles:
Semantics of OMIT: unless specified otherwise, for all TTCN-3 type definitions used in ASPs omit means "keep as it is" =>
- on initial configuration in general all fields shall be provided
- no default values for fields are foreseen
- if necessary non-existence of information shall be explicitly configured
  (e.g. with a union of "no configuration" and "configuration parameters"
- fields within structures imported from the core spec are excepted from this rule
- if a sub-structure is explicitly excluded from this rule all fields and sub-fields shall be fully specified for each (re-)configuration

### D.1.1 ASN1_Container

Definitions containing ASN.1 types for backward compatibility

**NR_ASN1_ARFCN_ValueNR_Type**

| TTCN-3 Union Type | | |
|---|---|---|
| **Name** | **NR_ASN1_ARFCN_ValueNR_Type** | |
| **Comment** | | |
| R15 | ARFCN_ValueNR | |

**NR_ASN1_UL_AM_RLC_Type**

| TTCN-3 Union Type | | |
|---|---|---|
| **Name** | **NR_ASN1_UL_AM_RLC_Type** | |
| **Comment** | | |
| R15 | UL_AM_RLC | |

### NR_ASN1_DL_AM_RLC_Type

| TTCN-3 Union Type | | |
|---|---|---|
| **Name** | **NR_ASN1_DL_AM_RLC_Type** | |
| **Comment** | | |
| R15 | DL_AM_RLC | |

### NR_ASN1_UL_UM_RLC_Type

| TTCN-3 Union Type | | |
|---|---|---|
| **Name** | **NR_ASN1_UL_UM_RLC_Type** | |
| **Comment** | | |
| R15 | UL_UM_RLC | |

### NR_ASN1_DL_UM_RLC_Type

| TTCN-3 Union Type | | |
|---|---|---|
| **Name** | **NR_ASN1_DL_UM_RLC_Type** | |
| **Comment** | | |
| R15 | DL_UM_RLC | |

### NR_ASN1_PDSCH_Config_Type

| TTCN-3 Union Type | | |
|---|---|---|
| **Name** | **NR_ASN1_PDSCH_Config_Type** | |
| **Comment** | | |
| R15 | PDSCH_Config | |

### NR_ASN1_PDSCH_ConfigCommon_Type

| TTCN-3 Union Type | | |
|---|---|---|
| **Name** | **NR_ASN1_PDSCH_ConfigCommon_Type** | |
| **Comment** | | |
| R15 | PDSCH_ConfigCommon | |

### NR_ASN1_SPS_Config_Type

| TTCN-3 Union Type | | |
|---|---|---|
| **Name** | **NR_ASN1_SPS_Config_Type** | |
| **Comment** | | |
| R15 | SPS_Config | |

### NR_ASN1_TDD_UL_DL_ConfigCommon_Type

| TTCN-3 Union Type | | |
|---|---|---|
| **Name** | **NR_ASN1_TDD_UL_DL_ConfigCommon_Type** | |
| **Comment** | | |
| R15 | TDD_UL_DL_ConfigCommon | |

### NR_ASN1_TDD_UL_DL_SlotConfig_Type

| TTCN-3 Union Type | | |
|---|---|---|
| **Name** | **NR_ASN1_TDD_UL_DL_SlotConfig_Type** | |
| **Comment** | | |
| R15 | TDD_UL_DL_SlotConfig | |

### NR_ASN1_FrequencyInfoDL_Type

| TTCN-3 Union Type | | |
|---|---|---|
| **Name** | **NR_ASN1_FrequencyInfoDL_Type** | |
| **Comment** | | |
| R15 | FrequencyInfoDL | |

### NR_ASN1_FrequencyInfoUL_Type

| TTCN-3 Union Type | | |
|---|---|---|
| **Name** | **NR_ASN1_FrequencyInfoUL_Type** | |
| **Comment** | | |
| R15 | FrequencyInfoUL | |

### NR_ASN1_BWP_UplinkCommon_Type

| TTCN-3 Union Type | | |
|---|---|---|
| **Name** | **NR_ASN1_BWP_UplinkCommon_Type** | |
| **Comment** | | |
| R15 | BWP_UplinkCommon | |

### NR_ASN1_BWP_UplinkDedicated_Type

| TTCN-3 Union Type | | |
|---|---|---|
| **Name** | **NR_ASN1_BWP_UplinkDedicated_Type** | |
| **Comment** | | |
| R15 | BWP_UplinkDedicated | |

### NR_ASN1_RACH_ConfigDedicated_Type

| TTCN-3 Union Type | | |
|---|---|---|
| **Name** | **NR_ASN1_RACH_ConfigDedicated_Type** | |
| **Comment** | | |
| R15 | RACH_ConfigDedicated | |

### NR_ASN1_SI_RequestConfig_Type

| TTCN-3 Union Type | | |
|---|---|---|
| **Name** | **NR_ASN1_SI_RequestConfig_Type** | |
| **Comment** | | |
| R15 | SI_RequestConfig | |

### NR_ASN1_PDSCH_ServingCellConfig_Type

| TTCN-3 Union Type | | |
|---|---|---|
| **Name** | **NR_ASN1_PDSCH_ServingCellConfig_Type** | |
| **Comment** | | |
| R15 | PDSCH_ServingCellConfig | |

### NR_ASN1_PUSCH_ServingCellConfig_Type

| TTCN-3 Union Type | | |
|---|---|---|
| **Name** | **NR_ASN1_PUSCH_ServingCellConfig_Type** | |
| **Comment** | | |
| R15 | PUSCH_ServingCellConfig | |

### NR_ASN1_SearchSpace_Type

| TTCN-3 Union Type | | |
|---|---|---|
| **Name** | **NR_ASN1_SearchSpace_Type** | |
| **Comment** | | |
| R15 | SearchSpace | |

### NR_ASN1_ControlResourceSet_Type

| TTCN-3 Union Type | | |
|---|---|---|
| **Name** | **NR_ASN1_ControlResourceSet_Type** | |
| **Comment** | | |
| R15 | ControlResourceSet | |

### NR_ASN1_BWP_Type

| TTCN-3 Union Type | | |
|---|---|---|
| **Name** | **NR_ASN1_BWP_Type** | |
| **Comment** | | |
| R15 | BWP | |

### NR_ASN1_DRX_Config_Type

| TTCN-3 Union Type | | |
|---|---|---|
| **Name** | **NR_ASN1_DRX_Config_Type** | |
| **Comment** | | |
| R15 | DRX_Config | |

### NR_ASN1_MeasGapConfig_Type

| TTCN-3 Union Type | | |
|---|---|---|
| **Name** | **NR_ASN1_MeasGapConfig_Type** | |
| **Comment** | | |
| R15 | MeasGapConfig | |

**NR_ASN1_MAC_CellGroupConfig_Type**

| TTCN-3 Union Type | | |
|---|---|---|
| **Name** | **NR_ASN1_MAC_CellGroupConfig_Type** | |
| **Comment** | | |
| R15 | MAC_CellGroupConfig | |

**NR_ASN1_PhysicalCellGroupConfig_Type**

| TTCN-3 Union Type | | |
|---|---|---|
| **Name** | **NR_ASN1_PhysicalCellGroupConfig_Type** | |
| **Comment** | | |
| R15 | PhysicalCellGroupConfig | |

**NR_ASN1_RateMatchPattern_Type**

| TTCN-3 Union Type | | |
|---|---|---|
| **Name** | **NR_ASN1_RateMatchPattern_Type** | |
| **Comment** | | |
| R15 | RateMatchPattern | |

**NR_ASN1_RateMatchPatternLTE_CRS_Type**

| TTCN-3 Union Type | | |
|---|---|---|
| **Name** | **NR_ASN1_RateMatchPatternLTE_CRS_Type** | |
| **Comment** | | |
| R15 | RateMatchPatternLTE_CRS | |

## D.1.2 System_Configuration

Formal ASP Definitions for system configuration

## NR_SystemRequest_Type

| TTCN-3 Union Type | | |
|---|---|---|
| **Name** | **NR_SystemRequest_Type** | |
| **Comment** | | |
| Cell | NR_CellConfigRequest_Type | configure/release a cell |
| CellAttenuation List | NR_CellAttenuationList_Type | power attenuation for one or several cells;<br>all cells included in the list shall be changed at the same time;<br>all cells in the list shall reach the new cell power within a maximum of 100ms (10 frames) as according to TS 38.523-3 clause 7.1.4.2<br>CellId: In the common ASP part the CellId shall be set<br>- to the cell the timing information refers to if activation time shall be applied<br>- to nr_Cell_NonSpecific when there is no activation time<br>TimingInfo: 'Now' (in general, but activation time may be used also) |
| RadioBearerList | NR_RadioBearerList_Type | configure/release one or several SRBs and/or DRBs at an SpCell<br>NOTE: RBs are not configured in an SCell |
| EnquireTiming | Null_Type | get current timing information for the given cell<br>TimingInfo : 'Now' |
| AS_Security | NR_AS_Security_Type | StartRestart/Release of AS security |
| SystemIndCtrl | NR_System_IndicationControl_Type | to configure SS to generate system indications |
| PdcpCount | NR_PDCP_CountReq_Type | to set or enquire PDCP COUNT for one or more RBs |
| DciTrigger | NR_DCI_Trigger_Type | to trigger a specific DCI to be transmitted on PDCCH (e.g. PDCCH order) |
| Paging | NR_PagingTrigger_Type | to trigger SS to send paging at the given paging occasion (as calculated in TTCN)<br>NOTE: The SS shall use the DCI configuration as provided by NR_PcchConfig_Type; the DCI may or may not carry a short message but it in any case it shall indicate presence |
| MacCommand Trigger | NR_MAC_ControlElementDL_Type | to trigger a specific MAC control element to be transmitted to the UE |
| L1_TestMode | NR_L1_TestMode_Type | to Set L1/MAC in special Test modes e.g. DL CRC etc.<br>per default (at initial configuration) no test mode is activated |
| PdcpHandover Control | NR_PDCP_HandoverControlReq_Type | to inform the target cell about the handover (or PSCell change) procedure. |
| DeltaValues | NR_Band_SsbForDelta_Type | to provide the primary and secondary frequency info for deriving the delta values |

### NR_SystemConfirm_Type

| TTCN-3 Union Type | | |
|---|---|---|
| **Name** | **NR_SystemConfirm_Type** | |
| **Comment** | confirmations for system configuration;<br>in general to be sent after the configuration has been done | |
| Cell | Null_Type | (no further parameters from SS) |
| CellAttenuation List | Null_Type | (no further parameters from SS)<br>NOTE 1:<br>the confirmation shall be sent when all cells have changed power levels<br>NOTE 2:<br>for the CellId in the common ASP part the same rules are applied as for the SYSTEM REQ |
| RadioBearerList | Null_Type | (no further parameters from SS) |
| EnquireTiming | Null_Type | the cell's timing information is contained in the TimingInfo of the ASP's common part |
| AS_Security | Null_Type | (no further parameters from SS) |
| SystemIndCtrl | Null_Type | (no further parameters from SS) |
| PdcpCount | NR_PDCP_CountCnf_Type | as response to 'Get' a list is returned containing COUNT information for the requested RBs |
| DciTrigger | Null_Type | (no further parameters from SS) |
| MacCommand Trigger | Null_Type | (no further parameters from SS) |
| L1_TestMode | Null_Type | confirmation for L1 test mode |
| PdcpHandover Control | Null_Type | confirmation for PDCP handover control |
| DeltaValues | UE_NR_DeltaValues_Type | Delta values to be used for primary and secondary band |

### NR_SystemIndication_Type

| TTCN-3 Union Type | | |
|---|---|---|
| **Name** | **NR_SystemIndication_Type** | |
| **Comment** | | |
| Error | charstring | indicates an error situation in SS;<br>is not explicitly handled in TTCN but causes an INCONC due to default behaviour;<br>an additional error code can be signalled in the common part of the ASP;<br>SS shall raise an error when in TS 38.523-3 or in any other ASP definitions |
| RlcDiscardInd | NR_RlcDiscardInd_Type | indicates discarded PDUs |
| MAC | NR_MAC_ControlElementUL_Type | indicates MAC control element being receive from the UE |
| RachPreamble | NR_RachPreamble_Type | RACH preamble being sent by the UE |
| SchedReq | Null_Type | indication for scheduling request sent by the UE |
| UL_HARQ | HARQ_Type | to report the UL HARQ as received on PUCCH or PUSCH for corresponding DL transmission |
| HarqError | NR_HarqError_Type | indicates detection of HARQ error:<br>1. HARQ CRC error for UL data<br>2. HARQ NACK from the UE unless SS is configured to report HARQ ACK/NACK |

## D.1.3 Cell_Configuration

Specific Info for Cell Configuration Primitive

### D.1.3.1 Cell_Configuration_Common

**NR_ASP_TypeDefs: Constant Definitions**

| TTCN-3 Basic Types | | | |
|---|---|---|---|
| **tsc_NR_CellAttenuation_Off** | NR_Attenuation_Type | {Off:=true} | |

**Cell_Configuration_Common: Basic Type Definitions**

| TTCN-3 Basic Types | | |
|---|---|---|
| **NR_InitialAttenuation_Type** | NR_Attenuation_Type (tsc_NR_CellAttenuation_Off) | Attenuation restricted to 'Off' |

**NR_CellConfigRequest_Type**

| TTCN-3 Union Type | | |
|---|---|---|
| **Name** | **NR_CellConfigRequest_Type** | |
| **Comment** | | |
| AddOrReconfigure | NR_CellConfigInfo_Type | for cell configuration:<br>TimingInfo : 'Now' for initial configuration; specific TimingInfo may be used for reconfiguration<br>ControlInfo : FollowOnFlag:=false (unless explicitly specified otherwise in TS 38.523-3 clause 7) |
| Release | Null_Type | to remove a cell completely -<br>CellId : identifier of the cell to be released; nr_Cell_NonSpecific, in case all cells shall be released<br>TimingInfo : 'Now'<br>ControlInfo : FollowOnFlag:=false |

### NR_CellConfigInfo_Type

| TTCN-3 Record Type | | | |
|---|---|---|---|
| **Name** | **NR_CellConfigInfo_Type** | | |
| **Comment** | common information for initial cell configuration or reconfiguration;<br>in case of reconfiguration omit means 'keep configuration as it is' | | |
| StaticResourceConfig | NR_SS_StaticCellResourceConfig_Type | opt | mandatory for the initial configuration; to be omitted afterwards |
| CellConfigCommon | NR_CellConfigCommon_Type | opt | common configuration parameters which are not specific to physical layer (or any other layer) |
| PhysicalLayer | NR_CellConfigPhysicalLayer_Type | opt | Physical layer configuration: physical channels, signals and BWPs for UL and DL; DCI |
| BcchConfig | NR_BcchConfig_Type | opt | configuration of BCCH/BCH; SS is triggered to configure RLC/MAC accordingly;<br>BCCH data on the PDSCH is distinguished by the SI-RNTI<br>PBCH: MIB;<br>PDSCH: scheduling and resource allocation; SIBs |
| PcchConfig | NR_PcchConfig_Type | opt | configuration of PCCH/PCH; SS is triggered to configure RLC/MAC accordingly;<br>PCCH data on the PDSCH is distinguished by the P-RNTI<br>(needed even to modify SI => shall be configured for CELL_BROADCASTING) |
| RachProcedureConfig | NR_RachProcedureConfig_Type | opt | to configure the SS's behaviour for the RACH procedure;<br>may be omitted at initial configuration e.g. in case that the cell shall not have an uplink;<br>NOTE: there is no way to explicitly remove the RACH procedure configuration after it has been configured for a cell |
| DcchDtchConfig | NR_DcchDtchConfig_Type | opt | Parameters related to DCCH/DTCH in UL and DL |
| ServingCellConfig | NR_ServingCellConfig_Type | opt | To be configured at initial configuration of a cell:<br>for non-CA scenarios it shall be either 'SpCell' or 'None' ('None' applies for pure neighbouring cells) |

### NR_SS_StaticCellResourceConfig_Type

| TTCN-3 Record Type | | | |
|---|---|---|---|
| **Name** | **NR_SS_StaticCellResourceConfig_Type** | | |
| **Comment** | capabilities af a cell according to the initial condition of a test case, to allow resource management at SS implementation (see TS 38.508-1 clause 6.3.1) | | |
| CellCapability | NR_CellCapability_Type | | common cell capability |
| CarrierAggregation | NR_CellInitialCAConfig_Type | | Initial configuration of a cell in context of carrier aggregation |

### NR_CellCapability_Type

| TTCN-3 Enumerated Type | |
|---|---|
| **Name** | **NR_CellCapability_Type** |
| **Comment** | capabilities of a cell acc. to the initial condition of a test case (see TS 38.508-1 clause 6.3.1) |
| broadcastOnlyCell | no detection of RACH preambles required; cell is only broadcasting |
| minimumUplinkCell | detection of RACH preambles required but not any further RX capability |
| fullCell | full TX and RX capabilities |

## NR_CellInitialCAConfig_Type

| TTCN-3 Enumerated Type | |
|---|---|
| **Name** | **NR_CellInitialCAConfig_Type** |
| **Comment** | static information about the cell's initial role for carrier aggregation, not being changed during a test case;<br>may be used for resource management at the SS; !!!! NR-TBD: reference to 38.508 !!!! |
| SpCell | Cell can be used as SpCell during a test case (primary cell of a master or secondary cell group; TS 37.340 clause 3.1);<br>normal case i.e. applicable even when SpCell is the only cell of the cell group |
| Scell_Active | Carrier Aggregation: Cell is added as SCell to a cell group and may get activated during a test case |
| Scell_Inactive | Carrier Aggregation: Cell is added as SCell to a cell group but will never get activated during the test case |
| None | e.g. when a cell is not used for connected mode during a test case (pure nighbouring cell) |

## NR_CellConfigCommon_Type

| TTCN-3 Record Type | | | |
|---|---|---|---|
| **Name** | **NR_CellConfigCommon_Type** | | |
| **Comment** | common configuration parameters which are not specific to physical layer (or any other layer) | | |
| C_RNTI | RNTI_Value_Type | opt | (pre-)configured C-RNTI used by physical layer and by MAC layer;<br>affects scrambling of PDSCH/PUSCH and CRC of PDCCH(s);<br>shall be used implicitly in RACH procedure (i.e. as CE in RAR) |
| CellTimingInfo | CellTimingInfo_Type | opt | |
| InitialCellPower | NR_InitialCellPower_Type | opt | reference cell power of each antenna in DL<br>NOTE 1:<br>the power of an antenna may be reduced by antenna specific configuration<br>NOTE 2:<br>in general the power may be adjusted on a per resource element basis<br>=> all physical channel/signal power settings shall be adjusted relatively to the reference cell power;<br>if there are more than one TX antennas each one may have its own attenuation;<br>independently from those relative power settings the cell power can easily be adjusted by just changing the reference power |

## NR_Attenuation_Type

| TTCN-3 Union Type | | |
|---|---|---|
| **Name** | **NR_Attenuation_Type** | |
| **Comment** | attenuation of the reference power | |
| Value | integer (0..149) | cell power reference power reduced by the given attenuation (value is in dB);<br>corresponds to AbsoluteCellPower_Type |
| Off | Null_Type | =< -145dBm according to TS 38.508-1 Table 6.2.2.1-3 |

**NR_InitialCellPower_Type**

| TTCN-3 Record Type | | | |
|---|---|---|---|
| **Name** | **NR_InitialCellPower_Type** | | |
| **Comment** | | | |
| MaxReference Power | NR_AbsoluteCellPower_Type | | maximum value of cell reference power (in dBm/SCS as per TS 38.508-1, clause 6.2.2);<br>a cell is initialised with this reference power;<br>its value is the upper bound of the cell power during the test case |
| Attenuation | NR_InitialAttenuation_Type | | initial attenuation |

## D.1.3.2 PhysicalLayer

**NR_CellConfigPhysicalLayer_Type**

| TTCN-3 Record Type | | | |
|---|---|---|---|
| **Name** | **NR_CellConfigPhysicalLayer_Type** | | |
| **Comment** | Common configuration of physical channels, signals and BWPs | | |
| Common | NR_CellConfigPhysicalLayerCommon_Type | opt | Configuration common for UL and DL |
| Downlink | NR_CellConfigPhysicalLayerDownlink_Type | opt | DL configuration |
| Uplink | NR_CellConfigPhysicalLayerUplink_Type | opt | UL configuration;<br>may be omitted at initial configuration e.g. in case that the cell shall not have an uplink;<br>NOTE: there is no way to explicitly remove the uplink configuration after it has been configured for a cell |

### D.1.3.2.1 PhysicalLayer_Common

**NR_CellConfigPhysicalLayerCommon_Type**

| TTCN-3 Record Type | | | |
|---|---|---|---|
| **Name** | **NR_CellConfigPhysicalLayerCommon_Type** | | |
| **Comment** | Configuration common for UL and DL | | |
| PhysicalCellId | PhysCellId | opt | Physical-layer cell identity according to 38.211 clause 7.4.2.1;<br>EN-DC: corresponds to ServingCellConfigCommon.physCellId |
| DuplexMode | NR_DuplexMode_Type | opt | FDD or TDD; FDD/TDD specific parameters |

**NR_DuplexMode_Type**

| TTCN-3 Union Type | | |
|---|---|---|
| **Name** | **NR_DuplexMode_Type** | |
| **Comment** | FDD/TDD and maybe other types of duplex mode; in general FDD/TDD mode is determined from the frequency band | |
| FDD | NR_FDD_Info_Type | |
| TDD | NR_TDD_Info_Type | |

**NR_FDD_Info_Type**

| TTCN-3 Record Type | |
|---|---|
| **Name** | **NR_FDD_Info_Type** |
| **Comment** | FDD (paired spectrum) specific parameters: no further parameters defined for FDD |

### NR_TDD_UL_DL_SlotConfigList_Type

| TTCN-3 Record of Type | |
|---|---|
| **Name** | **NR_TDD_UL_DL_SlotConfigList_Type** |
| **Comment** | corresponds to ServingCellConfig.tdd-UL-DL-ConfigurationDedicated |
| record of NR_ASN1_TDD_UL_DL_SlotConfig_Type | |

### NR_TDD_Config_Type

| TTCN-3 Record Type | | | |
|---|---|---|---|
| **Name** | **NR_TDD_Config_Type** | | |
| **Comment** | Common and dedicated TDD configuration | | |
| Common | NR_ASN1_TDD_UL_DL_ConfigCommon_Type | opt | Common TDD configuration as used in TS 38.213 clause 11 corresponding to ServingCellConfigCommon.tdd-UL-DL-ConfigurationCommon;<br>shall be present for TDD at initial configuration |
| Dedicated | NR_TDD_UL_DL_SlotConfigList_Type | opt | Dedicated TDD configuration for single slots over-ruling the flexible slots of the common configuration;<br>corresponds to ServingCellConfig.tdd-UL-DL-ConfigurationDedicated;<br>shall be present for TDD at initial configuration: the list is empty when there is no dedicated slot configuration;<br>(omit means "keep as it is");<br>NOTE: The dedicated configuration can only exist together with common configuration as a single slot configuration is related to the periodicity given by the common configuration (see TDD-UL-DL-SlotConfig field description for slotIndex in TS 38.331) |

### NR_TDD_Info_Type

| TTCN-3 Union Type | | |
|---|---|---|
| **Name** | **NR_TDD_Info_Type** | |
| **Comment** | cell specific parameters for TDD (unpaired spectrum) | |
| Config | NR_TDD_Config_Type | specific TDD configuration with sets of symbols for UL and DL and possibly flexible symbols which are not specified as UL or DL<br>(corresponding to TDD-UL-DL-ConfigurationCommon and TDD-UL-DL-ConfigDedicated according to TS 38.213 clause 11.1) |
| FullFlexible | Null_Type | No TDD configuration is provided to the UE: all slots and symbols are considered as flexible according to TS 38.213 clause 11.1 |

## D.1.3.2.2 PhysicalLayer_Downlink

### PhysicalLayer_Downlink: Basic Type Definitions

| TTCN-3 Basic Types | | |
|---|---|---|
| **NR_EPRE_Ratio_Type** | integer | Energy per resource element relative to given reference signal or abstract reference cell power (dB) |

**NR_CellConfigPhysicalLayerDownlink_Type**

| TTCN-3 Record Type | | | |
|---|---|---|---|
| **Name** | **NR_CellConfigPhysicalLayerDownlink_Type** | | |
| **Comment** | physical layer configuration at the SS for the downlink of a cell | | |
| FrequencyInfoDL | NR_ASN1_FrequencyInfoDL_Type | opt | carries information about location of SSB and reference resource block (point A) in frequency domain<br>and about associated frequency bands (list of FreqBandIndicatorNR) |
| SSPbchBlock | NR_SSB_Config_Type | opt | Configuration of SS/PBCH-block transmission |
| PdschCellLevelConfig | NR_PDSCH_CellLevelConfig_Type | opt | Cell-level configuration of PDSCH being applicable independent from the BWP a PDSCH is associated to |
| BWPs | NR_DownlinkBWPs_Type | opt | Configuration of DL BWPs and their associated physical channels and signals |
| CsiConfig | NR_CSI_Config_Type | opt | Configuration of CSI Reference Signals |

### D.1.3.2.2.1 SS_PBCH_Block

SS/PBCH block configuration according to TS 38.213 clause 4.1:
SS/PBCH block consists of synchronisation Signals (PSS and SSS) and PBCH (see e.g. TS 38.300 figure 5.2.4-1);
a demodulation reference signal (DM-RS) is frequency multiplexed on the PBCH symbols (TS 38.300 clause 5.2.4, TS 38.211 clause 7.4.1.4) and
the DM-RS sequence corresponds to the three LSBs of the SS/PBCH index (TS 38.213 clause 4.1 and TS 38.211 clause 7.4.1.4.1);
the SS/PBCH index needs to be maintained by the SS (as the system frame number);
the physical layer cell id is carried by PSS and SSS according to TS 38.211 clause 7.4.2

**SS_PBCH_Block: Basic Type Definitions**

| TTCN-3 Basic Types | | |
|---|---|---|
| **NR_SSB_Periodicity_Type** | ServingCellConfigCommon.ssb_periodicityServingCell | |
| **NR_SSB_PositionsInBurst_Type** | ServingCellConfigCommon.ssb_PositionsInBurst | |

**NR_SS_BlockPattern_Type**

| TTCN-3 Enumerated Type | |
|---|---|
| **Name** | **NR_SS_BlockPattern_Type** |
| **Comment** | TS 38.101-1 Table 5.4.3.3-1 specifies for a given operating band and SS Block subcarrier spacing which case of TS 38.213 clause 4.1 to be applied<br>=> first symbol indexes for candidate SS/PBCH blocks and the size of the bitmap are determined accordingly |
| caseA | 15 kHz subcarrier spacing: 4 bits (<= 3GHz) or 8 bits (> 3GHz); first symbol indexes: {2,8} + 14*n |
| caseB | 30 kHz subcarrier spacing: 4 bits (<= 3GHz) or 8 bits (> 3GHz); first symbol indexes: {4,8,16,20} + 28*n |
| caseC | 30 kHz subcarrier spacing: 4 bits (<= 3GHz) or 8 bits (> 3GHz); first symbol indexes: {2,8} + 14*n |
| caseD | 120 kHz subcarrier spacing: 64 bits (> 6GHz); first symbol indexes: {4,8,16,20} + 28*n |
| caseE | 240 kHz subcarrier spacing: 64 bits (> 6GHz); first symbol indexes: {8,12,16,20,32,36,40,44} + 56*n |

### NR_SSB_Beam_Type

| TTCN-3 Record Type | | | |
|---|---|---|---|
| **Name** | **NR_SSB_Beam_Type** | | |
| **Comment** | | | |
| SsbIndex | integer | opt | SSB index starting at 0 according to TS 38.213 clause 4.1 |
| Attenuation | integer | opt | Beam power: reference power for SSB transmissions relative to the actual reference cell power (MaxReferencePower - Attenuation of cell power);<br>the beam power is reduced by 'Attenuation' relative to the actual reference cell power;<br>the attenuation may be negative in which case the power level of the SSB transmission is higher than the actual cell power |

### NR_SSB_BeamArray_Type

| TTCN-3 Record of Type | |
|---|---|
| **Name** | **NR_SSB_BeamArray_Type** |
| **Comment** | |
| record of NR_SSB_Beam_Type | |

### NR_SSB_BurstConfig_Type

| TTCN-3 Record Type | | | |
|---|---|---|---|
| **Name** | **NR_SSB_BurstConfig_Type** | | |
| **Comment** | To describe the SSB burst | | |
| BlockPattern | NR_SS_BlockPattern_Type | opt | case A..E according to 38.213 clause 4.1;<br>mandatory for initial configuration, "keep as it is" in case of omit otherwise |
| PositionsInBurst | NR_SSB_PositionsInBurst_Type | opt | "SSB-transmitted" parameter as used by the UE to rate-match around SSBs acc. 38.214 cl. 5.1;<br>4, 8 or 64 bits;<br>mandatory for initial configuration, "keep as it is" in case of omit otherwise |
| BeamArray | NR_SSB_BeamArray_Type | opt | beam specific configuration:<br>if omit, all SSBs as configured in 'Bitmap' shall be transmitted with no attenuation (i.e. using the actual reference cell power);<br>if present only the SSBs contained in the array shall be transmitted (with beam power as according to their entry in the array);<br>when the array contains beams with an SSB index not included in 'Bitmap', the SS may raise an error |

## NR_SSB_EPREs_Type

| TTCN-3 Record Type | | | |
|---|---|---|---|
| **Name** | **NR_SSB_EPREs_Type** | | |
| **Comment** | EPRE for PBCH and related signals relative to the reference power (EPRE_SSB#N) of an SSB (beam) given by SSB index N | | |
| PbchToDmrs | NR_EPRE_Ratio_Type | opt | transmit power for resource elements (REs) being occupied by PBCH;<br>EPRE ratio of PBCH to PBCH DMRS |
| PssToSss | NR_EPRE_Ratio_Type | opt | Primary synchronization signal; 38.211 clause 7.4.2.2;<br>EPRE ratio of PSS to SSS |
| SssToSsbBeam | NR_EPRE_Ratio_Type | opt | Secondary synchronization signal; 38.211 clause 7.4.2.3;<br>EPRE ratio of SSS to EPRE_SSB#N; in general the SSS power is the same as the reference beam power, i.e. SssToSsbBeam = 0dB |
| DmrsToSss | NR_EPRE_Ratio_Type | opt | DM-RS associated to PBCH (Demodulation reference signals for PBCH; 38.211 clause 7.4.1.4);<br>EPRE ratio of PBCH DMRS to SSS |

## NR_SSB_Config_Type

| TTCN-3 Record Type | | | |
|---|---|---|---|
| **Name** | **NR_SSB_Config_Type** | | |
| **Comment** | Synchronization signals and PBCH; TS 38.211 clause 7.4.3, TS 38.300 clause 5.2.4;<br>NOTE:<br>SSB location in frequency domain is specified by<br>NR_CellConfigPhysicalLayerDownlink_Type.FrequencyInfoDL.absoluteFrequencySSB | | |
| SubCarrierSpacing | SubcarrierSpacing | opt | sub-carrier spacing for SS/PBCH block (as specified by ServingCellConfigCommon.subcarrierSpacing in case of non-initial access):<br>According to comments for ServingCellConfigCommon.subcarrierSpacing "Only the values 15 or 30 kHz (<6GHz), 120 or 240 kHz (>6GHz) are applicable"; this corresponds to tables 13-1 .. 13.10 in TS 38.213 where only 15 or 30 kHz and 120 or 240 kHz are considered for SS/PBCH block sub-carrier spacing;<br>and it corresponds to 38.211 clause 7.4.3.1 defining SS/PBCH block type A as numerology=0,1 and type B as numerology=3,4 (i.e. there is no numerology=2 for SS/PBCH block)<br>NOTE 1:<br>in contrast to SS/PBCH block sub-carrier spacing the sub-carrier spacing for SIB1, Msg.2/4 for initial access and broadcast SI-messages is restricted to<br>15kHz or 30kHz for carrier frequency <= 6 GHz and 60kHz or 120kHz for carrier frequency > 6 GHz<br>(see comments for MIB.subCarrierSpacingCommon and TS 38.213 tables 13-1 .. 13.10)<br>NOTE 2:<br>As long as there is no sub-carrier spacing of 60kHz (numerology=2) for the SS/PBCH block acc. to TS 38.211 Table 4.2-1 there is no extended cyclic prefix either<br>(even though Table 4.2-1 is mainly for BWP there is no indication for any extended cyclic prefix for SS/PBCH block)<br>=> there is no need to specify the cyclic prefix for SS/PBCH block configuration (normal cyclic prefix is assumed for all cases) |
| SubcarrierOffset | integer | opt | k_SSB as defined in TS 38.211 clause 7.4.3.1;<br>needs to be consistent with absoluteFrequencySSB and absoluteFrequencyPointA as provided by FrequencyInfoDL to the UE and the SS |
| Periodicity | NR_SSB_Periodicity_Type | opt | in multiples of half frames (5ms) |
| HalfFrameOffset | integer | opt | to specify together the Periodicity the half-frames in which the SSB burst shall be transmitted:<br>- for Periodicity = 5ms<br>SSB burst in every half-frame<br>- for a Periodicity >= 5ms<br>SSB burst in frames with (SFN mod (Periodicity / 10)) = (HalfFrameOffset / 2) and in the<br>- lower half-frame for (HalfFrameOffset mod 2) = 0<br>- higher half-frame for (HalfFrameOffset mod 2) = 1<br>Depending on the Periodicity the HalfFrameOffset has a range of 0 .. ((Periodicity / 5) - 1)<br>Unless explicitly required by a test case the HalfFrameOffset is always 0 |
| BurstConfig | NR_SSB_BurstConfig_Type | opt | to specify the burst configuration and a bitmap for the SS/PBCH block candidates which are eventually used for transmission of SS/PBCH blocks in a half frame |

| | | | |
|---|---|---|---|
| RelativeTxPower | NR_SSB_EPREs_Type | opt | transmit power for PBCH and SS/PBCH signals<br>NOTE:<br>Parameter SS-PBCHBlockPower is provided to the UE in SIB1.ss-PBCH-BlockPower, ServingCellConfigCommon.ss-PBCH-BlockPower) as referenceSignalPower;<br>The UE uses referenceSignalPower to determine the transmission power of the PRACH (TS 38.213 clause 7.4)<br>=> For signalling tests there seems to be no need to provide this parameter to the SS<br>(nevertheless the value provided to the UE shall not conflict with the power settings for the SSB at the SS) |

#### D.1.3.2.2.2 CSI_Configuration

**NR_CSI_RS_Periodicity_Type**

| **TTCN-3 Union Type** | | |
|---|---|---|
| **Name** | **NR_CSI_RS_Periodicity_Type** | |
| **Comment** | NOTE: may be extended with 'Aperiodic' branch if needed | |
| PeriodicityAndOffset | CSI_ResourcePeriodicityAndOffset | periodicity and slot offset as used by NZP-CSI-RS-Resource for periodic and semi-persistent configuration;<br>the periodicity is given in the number of slots whereas CSI-RS-Resource-Mobility.slotConfig specifies the periodicity in millseconds<br>=> to configure the CSI-RS configuration corresponding to CSI-RS-Resource-Mobility the periodicity needs to be converted in TTCN depending on the numerology |

## NR_NZP_CSI_RS_Config_Type

| TTCN-3 Record Type | | | |
|---|---|---|---|
| **Name** | **NR_NZP_CSI_RS_Config_Type** | | |
| **Comment** | Channel-state information reference signal (CSI) according to TS 38.211 clause 7.4.1.5, TS 38.214 clause 5.1.6.1 and clause 5.2.2.3;<br>the UE may be configured with non-zero-power (NZP) CSI-RS by<br>a) NZP-CSI-RS-Resource (contained in CSI-MeasConfig) or<br>b) CSI-RS-Resource-Mobility (contained in MeasConfig)<br>(according to TS 38.211 clause 7.4.1.5.1) | | |
| ScramblingId | ScramblingId | opt | INTEGER(0..1023); Scrambling ID for CSI-RS as provided to the UE in NZP-CSI-RS-Resource.scramblingID or CSI-RS-Resource-Mobility.sequenceGenerationConfig |
| ResourceMapping | CSI_RS_ResourceMapping | opt | resource mapping as used in NZP-CSI-RS-Resource;<br>there is the following mapping with CSI-RS-CellMobility<br>- frequencyDomainAllocation:<br>For CSI-RS-Resource-Mobility there are row1 or row2 only<br>- nrofPorts:<br>One port for CSI-RS-Resource-Mobility (according to TS 38.211 Table 7.4.1.5.3-1 for Row=1 and Row=2)<br>- firstOFDMSymbolInTimeDomain (l0):<br>same for CSI-RS-ResourceMapping and CSI-RS-Resource-Mobility<br>- firstOFDMSymbolInTimeDomain2 (l1):<br>Not present for CSI-RS-Resource-Mobility (there is no l1 for Row=1 and Row=2 in Table 7.4.1.5.3-1 of TS 38.211)<br>- cdm-Type:<br>No CDM for CSI-RS-Resource-Mobility (according to Row=1 and Row=2 in Table 7.4.1.5.3-1 of TS 38.211)<br>- density:<br>ENUMERATED {d1,d3} for CSI-RS-CellMobility to be mapped to CHOICE (one, three) of CSI-RS-ResourceMapping<br>- freqBand:<br>According to TS 38.331<br>a) CSI-FrequencyOccupation specifies the frequency range for CSI-RS relative to a given BWP (CSI-ResourceConfig.bwp-id) whereas<br>b) CSI-RS-CellMobility specifies the position relative to point A (given by MeasObjectNR.refFreqCSI-RS)<br>=> As there is no equivalent to CSI-ResourceConfig.bwp-id for variant b), 'OffsetToFreqBand' is used to fully specify the frequency range (see below) |
| OffsetToFreqBand | integer | opt | The frequency band for CSI-RS starts at OffsetToFreqBand + ResourceMapping.freqBand.startingRB from point A.<br>a) When the UE is configured with NZP-CSI-RS-Resource: ResourceMapping.freqBand shall be set to the same value as signalled to the UE and OffsetToFreqBand shall be set offsetToCarrier + BWP.RB_Start.<br>(NOTE: in general RB_Start is 0 in BWP.locationAndBandwidth: i.e. BWP.RB_Start=0 => OffsetToFreqBand = offsetToCarrier)<br>b) When the UE is configured with CSI-RS-CellMobility: OffsetToFreqBand and ResourceMapping.freqBand.startingRB shall be set so that<br>OffsetToFreqBand + ResourceMapping.freqBand.startingRB = CSI-RS-CellMobility.csi-rs-MeasurementBW.startPRB.<br>(NOTE: In general it shall be<br>OffsetToFreqBand = offsetToCarrier and<br>ResourceMapping.freqBand.startingRB = CSI-RS-CellMobility.csi-rs-MeasurementBW.startPRB - offsetToCarrier) |

| | | | |
|---|---|---|---|
| Periodicity | NR_CSI_RS_Periodicity_Type | opt | |
| Attenuation | integer | opt | Beam power: reference power for CSI-RS transmissions relative to the actual reference cell power (MaxReferencePower - Attenuation of cell power);<br>see NR_SSB_Beam_Type |

### NR_NZP_CSI_RS_ConfigList_Type

| TTCN-3 Record of Type | |
|---|---|
| **Name** | **NR_NZP_CSI_RS_ConfigList_Type** |
| **Comment** | Array with set of CSI reference signals; each CSI-RS may belong to a different beam |
| record of NR_NZP_CSI_RS_Config_Type | |

### NR_CSI_Config_Type

| TTCN-3 Union Type | | |
|---|---|---|
| **Name** | **NR_CSI_Config_Type** | |
| **Comment** | Primitive for configuration CSI at the SS<br>NOTE: further branches may be added e.g. to support CSI-IM | |
| CSI_RS | NR_NZP_CSI_RS_ConfigList_Type | Configuration of CSI reference signals:<br>Configuration of CSI reference signals does not necessarily mean that there is CSI reporting but CSI-RS is also needed for<br>- link monitoring (beam failure scenarios) and<br>- neighbouring cell measurement.<br>For these cases periodic CSI-RS is used and may be started immediately (TimingInfo=Now) or at a specific point in time with periodicity as specified by Periodicity.PeriodicityAndOffset.<br>Semi-persistent CSI-RS could be realised in the same way as periodic CSI-RS (but with specific TimingInfo).<br>Aperiodic CSI-RS is not considered so far<br>(NOTE: For simple cases of aperiodic CSI-RS NR_CSI_RS_Periodicity_Type may be extended with an 'Aperiodic' branch but e.g. combination of periodic and aperiodic CSI-RS would require a more complex approach, e.g. with explicit trigger for the transmission of the CSI-RS) |
| None | Null_Type | |

## D.1.3.2.2.3 Cell_Level_Configuration_PDSCH

### Cell_Level_Configuration_PDSCH: Basic Type Definitions

| TTCN-3 Basic Types | | |
|---|---|---|
| **NR_PDSCH_DMRS_Type A_Position_Type** | MIB.dmrs_TypeA_Position | same as ServingCellConfigCommon.dmrs-TypeA-Position |

### NR_PDSCH_CellLevelConfig_Type

| TTCN-3 Record Type | | | |
|---|---|---|---|
| **Name** | **NR_PDSCH_CellLevelConfig_Type** | | |
| **Comment** | cell-level parameters for PDSCH:<br>in contrast to BWP specific parameters the cell-level parameters apply to any PDSCH independent from the BWP a PDSCH is associated to | | |
| DMRS_TypeA_Position | NR_PDSCH_DMRS_TypeA_Position_Type | opt | Provided to the UE by MIB.dmrs-TypeA-Position or ServingCellConfigCommon.dmrs-TypeA-Position;<br>dmrs-TypeA-Position defines position of the first DM-RS symbol in the sequence of DM-RS symbols according to TS 38.211 clause 7.4.1.1. |
| RateMatchPattern | NR_CellLevelRateMatchPattern_Type | opt | rate match pattern according to TS 38.214 clause 5.1.4 |
| ServingCellConfig | NR_ASN1_PDSCH_ServingCellConfig_Type | opt | PDSCH related parameters not being BWP-specific;<br>corresponds to ServingCellConfig.pdsch-ServingCellConfig |

### NR_RateMatchPatternList_Type

| TTCN-3 Record of Type | |
|---|---|
| **Name** | **NR_RateMatchPatternList_Type** |
| **Comment** | |
| record of NR_ASN1_RateMatchPattern_Type | |

### NR_RateMatchPatternLteCrsList_Type

| TTCN-3 Record of Type | |
|---|---|
| **Name** | **NR_RateMatchPatternLteCrsList_Type** |
| **Comment** | |
| record of NR_ASN1_RateMatchPatternLTE_CRS_Type | |

### NR_CellLevelRateMatchPattern_Type

| TTCN-3 Record Type | | | |
|---|---|---|---|
| **Name** | **NR_CellLevelRateMatchPattern_Type** | | |
| **Comment** | configuration of rate match pattern on cell level (see TS 38.214 clause 5.1.4) | | |
| PatternList | NR_RateMatchPatternList_Type | opt | up to 4 cell-level RateMatchPattern according to TS 38.214 clause 5.1.4 (L1 RateMatchPattern);<br>corresponds to ServingCellConfigCommon.rateMatchPatternToAddModList/rateMatchPatternToReleaseList;<br>empty list per default (i.e. at initial configuration) |
| PatternListLteCrs | NR_RateMatchPatternLteCrsList_Type | opt | 0 or 1 LTE CRS pattern to rate match around (see TS 38.214 clause 5.1.4.2)<br>corresponds to ServingCellConfigCommon.lte-CRS-ToMatchAround;<br>empty list per default (i.e. at initial configuration) |

#### D.1.3.2.2.4 Downlink_BWP

**NR_DownlinkBWP_Type**

| TTCN-3 Record Type | | | |
|---|---|---|---|
| **Name** | **NR_DownlinkBWP_Type** | | |
| **Comment** | Configuration of single BWP at the SS | | |
| Id | BWP_Id | opt | Initial BWP: 0<br>Dedicated BWP: 1..4 |
| BWP | NR_ASN1_BWP_Type | opt | Frequency domain location and bandwidth, subcarrier spacing, cyclic prefix |
| Pdcch | NR_BWP_PDCCH_Configuration_Type | opt | |
| Pdsch | NR_BWP_PDSCH_Configuration_Type | opt | |
| Sps | NR_ASN1_SPS_Config_Type | opt | BWP-DownlinkDedicated.SPS-Config |

**NR_DownlinkBWP_List_Type**

| TTCN-3 Record of Type | |
|---|---|
| **Name** | **NR_DownlinkBWP_List_Type** |
| **Comment** | configuration of BWPs: each entry shall have a distinct Id with ID=0 for the initial BWP;<br>NOTE 1:<br>Even though in general the BWP-Id corresponds to the index of the element within the array of BWPs, the SS shall not take this as assumption |
| record of NR_DownlinkBWP_Type | |

**NR_DownlinkBWPs_Type**

| TTCN-3 Record Type | | | |
|---|---|---|---|
| **Name** | **NR_DownlinkBWPs_Type** | | |
| **Comment** | configuration of downlink BWPs | | |
| ActiveBWP | BWP_Id | opt | Id of the currently active BWP (this does not need to be the same as the index)<br>According to TS 38.211 clause 4.4.5:<br>"A UE can be configured with up to four carrier bandwidth parts in the downlink with a single downlink carrier bandwidth part being active at a given time.<br>The UE is not expected to receive PDSCH, PDCCH, CSI-RS, or TRS outside an active bandwidth part." |
| BwpArray | NR_DownlinkBWP_List_Type | opt | array of band width parts: initial BWP + up to 4 dedicated BWPs |

D.1.3.2.2.4.1 PDSCH_Configuration

Configuration of PDSCH and its related reference signals:
- DM-RS (Demodulation reference signal); TS 38.211 clause 7.4.1.1
- PT-RS (Phase-tracking reference signals for PDSCH); TS 38.211 clause 7.4.1.2

### NR_BWP_PDSCH_Configuration_Type

| TTCN-3 Record Type | | | |
|---|---|---|---|
| **Name** | **NR_BWP_PDSCH_Configuration_Type** | | |
| **Comment** | PDSCH configuration at the SS for specific BWP | | |
| ConfigCommon | NR_ASN1_PDSCH_ConfigCommon_Type | opt | |
| ConfigDedicated | NR_ASN1_PDSCH_Config_Type | opt | |
| RelativeTxPower | NR_PDSCH_EPREs_Type | opt | |

### NR_PDSCH_EPREs_Type

| TTCN-3 Record Type | | | |
|---|---|---|---|
| **Name** | **NR_PDSCH_EPREs_Type** | | |
| **Comment** | EPRE for PDSCH and related signals | | |
| PdschToCell | NR_EPRE_Ratio_Type | opt | transmit power relative to given reference cell power for resource elements (REs) being occupied by PDSCH |
| PdschToDmrs | NR_EPRE_Ratio_Type | opt | EPRE power ratio of PDSCH to DM-RS being associated to the PDSCH according to TS 38.214 clause 4.1 |
| PdschToPtrs | NR_EPRE_Ratio_Type | opt | EPRE power ratio of PDSCH to PT-RS being associated to the PDSCH according to TS 38.214 clause 4.1<br>NOTE:<br>PT-RS need only to be considered when being present (TS 38.211 clause 7.4.1.2.2 according to TS 38.214 clause 4.1), i.e. the SS shall ignore the PT-RS's EPRE if no PT-RS is present |

D.1.3.2.2.4.2 PDCCH_Configuration

Configuration of PDSCH and its related reference signals:
- DM-RS (Demodulation reference signal); TS 38.211 clause 7.4.1.3

### NR_BWP_PDCCH_Configuration_Type

| TTCN-3 Record Type | | | |
|---|---|---|---|
| **Name** | **NR_BWP_PDCCH_Configuration_Type** | | |
| **Comment** | PDCCH configuration at the SS for specific BWP;<br>NOTE:<br>There are no fields for PDCCH-Config's "downlinkPreemption", "slotFormatIndicator", "tpc-PUSCH" and "tpc-PUCCH":<br>This information is related to triggering DCI formats 2_X an shall be configured there (NR_DCI_Trigger_Type) according to test case requirements | | |
| SearchSpaceArray | NR_BWP_SearchSpaceList_Type | opt | |
| CoresetArray | NR_BWP_CoresetList_Type | opt | |
| RelativeTxPower | NR_PDCCH_EPREs_Type | opt | |
| Coreset0_OffsetRBs | integer | opt | Number of Offset RBs as specified in 38.213 clause 13. Applied to CORESET#0 only |

### NR_BWP_CoresetList_Type

| TTCN-3 Record of Type | |
|---|---|
| **Name** | **NR_BWP_CoresetList_Type** |
| **Comment** | list of CORESETs defined for a single BWP;<br>according to TS 38.213 clause 10.1 "The control resource set configured for Type0-PDCCH common search space has control resource set index 0"<br>NOTE: even though in general (array) index and controlResourceSetId are the same it is not clear what is meant by TS 38.213 |
| record of NR_ASN1_ControlResourceSet_Type | |

### NR_BWP_SearchSpaceList_Type

| TTCN-3 Record of Type | |
|---|---|
| **Name** | **NR_BWP_SearchSpaceList_Type** |
| **Comment** | list of search spaces defined for a single BWP;<br>according to TS 38.213 clause 10.1 "The Type0-PDCCH common search space has search space index 0"<br>NOTE: even though in general (array) index and searchSpaceId are the same it is not clear what is meant by TS 38.213 |
| record of NR_BWP_SearchSpaceConfig_Type | |

### NR_PDCCH_EPREs_Type

| TTCN-3 Record Type | | | |
|---|---|---|---|
| **Name** | **NR_PDCCH_EPREs_Type** | | |
| **Comment** | EPRE for PDCCH and related signals | | |
| PdcchToCell | NR_EPRE_Ratio_Type | opt | transmit power relative to given reference cell power for resource elements (REs) being occupied by PDCCH |
| PdcchToDmrs | NR_EPRE_Ratio_Type | opt | EPRE power ratio of PDCCH to DM-RS being associated to the PDCCH;<br>further DMRS parameters are given by ASN.1 PDCCH-Config as signalled to the UE or by additional parameters of the initial BWP configuration |

#### D.1.3.2.2.4.2.1 Search_Space_Configuration

### Search_Space_Configuration: Basic Type Definitions

| TTCN-3 Basic Types | | |
|---|---|---|
| **NR_SearchSpaceCandidatePriority_Type** | UInt_Type | Priorities to be considered by the SS in order to choose the candidate of a search space not colliding with the candidate of some other search space;<br>a value of 0 represents the highest priority, a value of 1 the second highest priority and so on.<br>(see TS 38.523-3 clause 7.1.2.1.4 for further details) |

### NR_SearchSpaceType_Type

| TTCN-3 Enumerated Type | |
|---|---|
| **Name** | **NR_SearchSpaceType_Type** |
| **Comment** | types of search spaces according to TS 38.213 clause 10.1;<br>NOTE 1: In principle there could be more than one instance for the same kind of search space; if this is ever needed, this enumerated shall be enhanced by introduction of a second entry for a particular type.<br>NOTE 2: For the USS UL and DL are distinguished as they may need different priority in terms of scheduling of DCIs |
| cssType0 | Type0-PDCCH common search space for scheduling of SIB1 (SI-RNTI);<br>the SS shall scramble the DCI format's CRC with SI-RNTI;<br>aggregation level and number of candidates correspond to TS 38.213 Table 10.1-1;<br>For stand-alone options parameters of search space and associated CORESET are according MIB.pdcch-ConfigSIB1 (TS 38.213 clause 13) |
| cssType0A | Type0A-PDCCH common search space for scheduling of other system information (SI-RNTI);<br>the SS shall scramble the DCI format's CRC with SI-RNTI |
| cssType1 | Type1-PDCCH common search space for scheduling of Msg2 or Msg4 of RACH procedure;<br>the SS shall scramble the DCI format's CRC with RA-RNTI for Msg2 or with TC-RNTI for Msg4 (temporary C-RNTI) as configured for Msg4 (NR_TempC_RNTI_Type in NR_RAR_Payload_Type) |
| cssType2 | Type2-PDCCH common search space for scheduling of Paging messages or short messages (P-RNTI);<br>the SS shall scramble the DCI format's CRC with P-RNTI |
| cssType3 | Type3-PDCCH common search space for other purpose DCIs<br>(INT-RNTI, SFI-RNTI, TPC-PUSCH-RNTI, TPC-PUCCH-RNTI, TPC-SRS-RNTI, C-RNTI, CS-RNTI(s));<br>the SS shall scramble the DCI format's CRC with the RNTI-value as according to the ASP triggering the DCI to be sent |
| ussDL | UE-specific search space (C-RNTI, CS-RNTI(s));<br>the SS shall scramble the DCI format's CRC with the C-RNTI value as stored for the cell (NR_CellConfigCommon_Type) |
| ussUL | UE-specific search space: as USS_DL but in general with lower priority to give DL assignments precedence over periodic UL grants |

### NR_SearchSpaceTypeAndPriority_Type

| TTCN-3 Record Type | | | |
|---|---|---|---|
| **Name** | **NR_SearchSpaceTypeAndPriority_Type** | | |
| **Comment** | | | |
| Type | NR_SearchSpaceType_Type | | |
| CandidatePriority | NR_SearchSpaceCandidatePriority_Type | | priority to be considered when candidates of a different or the same search space overlap the same CCEs |

### NR_SearchSpaceTypeAndPriorityList_Type

| TTCN-3 Record of Type | |
|---|---|
| **Name** | **NR_SearchSpaceTypeAndPriorityList_Type** |
| **Comment** | |
| record of NR_SearchSpaceTypeAndPriority_Type | |

### NR_PDCCH_CCE_AggregationLevel_Type

| TTCN-3 Enumerated Type | |
|---|---|
| **Name** | **NR_PDCCH_CCE_AggregationLevel_Type** |
| **Comment** | Aggregation level for a search space |
| AggregationLevel1 | |
| AggregationLevel2 | |
| AggregationLevel4 | |
| AggregationLevel8 | |
| AggregationLevel16 | |

### NR_BWP_SearchSpaceConfig_Type

| TTCN-3 Record Type | | | |
|---|---|---|---|
| **Name** | **NR_BWP_SearchSpaceConfig_Type** | | |
| **Comment** | configuration of a single search space at the SS:<br>The position of a particular search space candidate in frequency and time domain depends on configuration of the search space and its associated CORESET<br>(see TS 38.213 clause 10.1):<br>- Common or UE-specific search space<br>- aggregation level L<br>- number of candidates per aggregation level<br>- PDCCH monitoring periodicity and offset<br>- frequency domain resources<br>- number of symbols (time domain)<br>in addition in case of UE-specific search space:<br>- C-RNTI (as configured for the active cell)<br>- carrier indicator field value (in case of cross carrier scheduling)<br><br>all fields are mandatory as modification of a single field may cause inconsistencies | | |
| TypeAndPriorityList | NR_SearchSpaceTypeAndPriorityList_Type | | list of search space types (according to TS 38.213 clause 10.1) to be mapped to the given search space configuration.<br>NOTE 1:<br>In general the lists of search space types for different search spaces shall be mutual exclusive;<br>NOTE 2:<br>TS 38.213 clause 10.1 could be read as if the different types of search spaces use distinct instances of search spaces; nevertheless RRC type definitions allow use of different types in one and the same search space |
| AggregationLevel | NR_PDCCH_CCE_AggregationLevel_Type | | aggregation level to be applied for an actual PDCCH of the given search space |
| SearchSpaceConfigAtUE | NR_ASN1_SearchSpace_Type | | search space configuration as sent to the UE; contains searchSpaceId and controlResourceSetId referring to the associated CORESET;<br>furthermore the SS may need e.g. the number of candidates to detect error situations in context of candidate selection |

D.1.3.2.2.4.2.2 Search_Space_DCI_Assignment

### NR_BWP_Id_List_Type

| TTCN-3 Record of Type | |
|---|---|
| **Name** | **NR_BWP_Id_List_Type** |
| **Comment** | |
| record of BWP_Id | |

## NR_AssignedBWPs_Type

| TTCN-3 Record Type | | | |
|---|---|---|---|
| **Name** | **NR_AssignedBWPs_Type** | | |
| **Comment** | definition of a set of BWPs being assigned e.g. to system information scheduling or RACH procedures<br>NOTE 1: there is no error when e.g. "ActiveBWP" is set and the currently active BWP is contained in DedicatedBWPs too<br>NOTE 2: it is up to use of this type in TTCN to ensure that a specific BWP assignment makes sense, in most cases multiple BWPs may not be applicable | | |
| ActiveBWP | Null_Type | opt | SS shall assign the currently active BWP |
| InitialBWP | Null_Type | opt | SS shall assign the initial BWP |
| DedicatedBWPs | NR_BWP_Id_List_Type | | SS shall assign all BWPs as listed (on top of active or initial BWP if set); an empty list indicates that no (additional) BWPs are assigned |

## NR_SearchSpaceDlDciAssignment_Type

| TTCN-3 Record Type | | | |
|---|---|---|---|
| **Name** | **NR_SearchSpaceDlDciAssignment_Type** | | |
| **Comment** | configuration of DCI for a specific search space;<br>in general the configuration belongs to a transport channel configuration (e.g. BCH, PCH, DL-SCH): the DCI is applied for DL transmission on the respective channel and<br>can be explicitly initiated by TTCN (e.g. PCH, DL-SCH) or automatically by the SS (e.g. BCH or Msg2/Msg4 scheduling of RACH procedure);<br>all fields are mandatory for the first configuration of an instance for modifications "omit" means "keep as it is" | | |
| AssignedBWPs | NR_AssignedBWPs_Type | opt | BWP where given DCI shall be scheduled in given search space;<br>NOTE 1:<br>When there is no BWP according to configuration of AssignedBWPs, there is no DL assignment;<br>this can be used e.g. to prevent automatic scheduling of system information;<br>NOTE 2:<br>In principle a DL assignment can happen simultaneously in more than one BWP e.g. if system information shall be scheduled in active and initial BWP;<br>but as long as there is no use case for simultaneous DL assignments, configuration of AssignedBWPs shall be restricted to a maximum of one BWP |
| SearchSpaceType | NR_SearchSpaceType_Type | opt | search space to be used for sending of given DCI;<br>when at the scheduled point in time of a DL transmission there is no such search space configured at the given BWP, the SS may raise an error |
| DciInfo | NR_DciDlInfo_Type | opt | DCI to be used |

**NR_SearchSpaceUlDciAssignment_Type**

| TTCN-3 Record Type | | | |
|---|---|---|---|
| **Name** | **NR_SearchSpaceUlDciAssignment_Type** | | |
| **Comment** | configuration of DCI for UL grants in the UL USS;<br>in general the configuration belongs to a transport channel configuration (e.g. UL-SCH);<br>all fields are mandatory for the first configuration of an instance for modifications "omit" means "keep as it is" | | |
| AssignedBWPs | NR_AssignedBWPs_Type | opt | BWP where given DCI shall be scheduled in given search space; AssignedBWPs shall specify exactly one BWP (ActiveBWP in general); the SS may raise an error otherwise |
| SearchSpaceType | NR_SearchSpaceType_Type | opt | search space to be used for sending of given DCI;<br>when at the scheduled point in time of a UL grant transmission there is no such search space configured at the given BWP, the SS may raise an error |
| DciInfo | NR_DciUlInfo_Type | opt | DCI to be used |

### D.1.3.2.3 PhysicalLayer_Uplink

Uplink physical layer configuration: UL channels and BWPs

**NR_CellConfigPhysicalLayerUplink_Type**

| TTCN-3 Record Type | | | |
|---|---|---|---|
| **Name** | **NR_CellConfigPhysicalLayerUplink_Type** | | |
| **Comment** | physical layer configuration at the SS for the uplink of a cell | | |
| Uplink | NR_Uplink_Type | opt | |
| Supplementary Uplink | NR_Uplink_Type | opt | |
| TimingAdvance | NR_SS_TimingAdvanceConfig_Type | opt | |
| PUSCH_ServingCellConfig | NR_ASN1_PUSCH_ServingCellConfig_Type | opt | |
| PUSCH_ServingCellConfigSUL | NR_ASN1_PUSCH_ServingCellConfig_Type | opt | |

**NR_Uplink_Type**

| TTCN-3 Union Type | | |
|---|---|---|
| **Name** | **NR_Uplink_Type** | |
| **Comment** | | |
| Config | NR_UplinkConfig_Type | |
| None | Null_Type | in case the uplink or supplementary uplink is not used/needed |

**NR_SS_TimingAdvanceConfig_Type**

| TTCN-3 Union Type | | |
|---|---|---|
| **Name** | **NR_SS_TimingAdvanceConfig_Type** | |
| **Comment** | | |
| InitialValue | NR_RACH_TimingAdvance_Type | initial 12 bit value corresponding to Timing Advance Command field of the Random Access Response (TS 38.321 clause 6.2.3): value of 0..3846 according to TS 38.213 clause 4.2; 0 in normal cases) |
| Relative | NR_TimingAdvanceIndex_Type | timing advance command to adjust changes of timing advance acc. to TS 38.213 clause 4.2;<br>(range acc. 6 bit value: -31..32) |

#### D.1.3.2.3.1 Uplink_BWP

**NR_UplinkBWP_Type**

| TTCN-3 Record Type | | | |
|---|---|---|---|
| **Name** | **NR_UplinkBWP_Type** | | |
| **Comment** | Configuration of single BWP at the SS;<br>NOTE: for rel-15 this is the same as the ASN.1 type "BWP-Uplink" but nevertheless the TTCN type may be useful for future extensions | | |
| Id | BWP_Id | opt | Initial BWP: 0<br>Dedicated BWP: 1..4 |
| Common | NR_ASN1_BWP_UplinkCommon_Type | opt | contains common configuration for RACH, PUSCH, PUCCH configuration at the UE:<br>- Initial BWP:<br>-> ServingCellConfigCommon.uplinkConfigCommon.initialUplinkBWP<br><br>ServingCellConfigCommon.supplementaryUplinkConfig.initialUplinkBWP<br>-> SIB1.uplinkConfigCommon.initialUplinkBWP<br><br>SIB1.supplementaryUplink.uplinkConfigCommon.initialUplinkBWP<br>- Dedicated BWP:<br>-> ServingCellConfig.uplinkConfig.uplinkBWP-ToAddModList[-].bwp-Common<br>ServingCellConfig.supplementaryUplink.uplinkBWP-ToAddModList[-].bwp-Common |
| Dedicated | NR_ASN1_BWP_UplinkDedicated_Type | opt | contains dedicated configuration for PUCCH, PUCCH, ConfiguredGrant, SRS, BeamFailureRecovery configuration at the UE:<br>- Initial BWP:<br>-> ServingCellConfig.uplinkConfig.initialUplinkBWP<br>ServingCellConfig.supplementaryUplink.initialUplinkBWP<br>- Dedicated BWP:<br>-> ServingCellConfig.uplinkConfig.uplinkBWP-ToAddModList[-].bwp-Dedicated<br>ServingCellConfig.supplementaryUplink.uplinkBWP-ToAddModList[-].bwp-Dedicated |

**NR_UplinkBWP_List_Type**

| TTCN-3 Record of Type | |
|---|---|
| **Name** | **NR_UplinkBWP_List_Type** |
| **Comment** | configuration of BWPs: each entry shall have a distinct Id with ID=0 for the initial BWP<br>NOTE: Even though in general the BWP-Id corresponds to the index of the element within the array of BWPs, the SS shall not take this as assumption |
| record of NR_UplinkBWP_Type | |

### NR_ActiveUplinkBWP_Id_Type

| TTCN-3 Union Type | | |
|---|---|---|
| **Name** | **NR_ActiveUplinkBWP_Id_Type** | |
| **Comment** | | |
| Explicit | BWP_Id | in case that BWP-Id of active UL-BWP (and/or active UL-BWP of supplementary UL) is different than BWP-Id of active DL-BWP |
| SameIdAsDL | Null_Type | same BWP-Id as of the active DL-BWP |

### NR_UplinkBWPs_Type

| TTCN-3 Record Type | | | |
|---|---|---|---|
| **Name** | **NR_UplinkBWPs_Type** | | |
| **Comment** | configuration of uplink BWPs | | |
| ActiveBWP | NR_ActiveUplinkBWP_Id_Type | opt | Id of the currently active BWP (this does not need to be the same as the index) |
| BwpArray | NR_UplinkBWP_List_Type | opt | array of band width parts: initial BWP + up to 4 dedicated BWPs |

### NR_UplinkConfig_Type

| TTCN-3 Record Type | | | |
|---|---|---|---|
| **Name** | **NR_UplinkConfig_Type** | | |
| **Comment** | configuration of a single uplink (uplink or supplementary uplink) | | |
| FrequencyInfoUL | NR_ASN1_FrequencyInfoUL_Type | opt | carries information about location of reference resource block (point A) in frequency domain<br>and about associated frequency bands (list of FreqBandIndicatorNR) |
| BWPs | NR_UplinkBWPs_Type | opt | |
| RACH_ConfigDedicated | NR_ASN1_RACH_ConfigDedicated_Type | opt | configuration at the UE:<br>-> SpCellConfig.reconfigurationWithSync.rach-ConfigDedicated.uplink/supplementaryUplink |
| SI_RequestConfig | NR_ASN1_SI_RequestConfig_Type | opt | configuration of PRACH preamble(s) and PRACH resource(s) for si-RequestConfig configuration at the UE: -> in SIB1.si-SchedulingInfo.si-RequestConfig |

## D.1.3.2.4 DCI_Configuration

Definitions for resource assignment and DCI according to TS 38.212 clause 7.3 and TS 38.214 clause 5.1.2 and 6.1.2

### D.1.3.2.4.1 Common_Fields

Common type definitions for DCI fields being used for UL and DL assignments (format 0_X and 1_X);
NOTE: in general fields of DCIs are defined as union in the first place to allow backward compatible enhancements, e.g. when a dynamic SS behaviour needs to replace the static value assignment

### NR_DciCommon_CarrierIndicator_Type

| TTCN-3 Union Type | | |
|---|---|---|
| **Name** | **NR_DciCommon_CarrierIndicator_Type** | |
| **Comment** | Carrier indicator field (CIF) of DCI formats 0_1 and 1_1 according to TS 38.212 and TS 38.213 clause 10.1 | |
| None | Null_Type | no cell index to be indicated in Carrier indicator field |
| CellIndex | B3_Type | 3 bits cell index to be indicated in Carrier indicator field; applicable when the UE is configured with higher layer parameter CrossCarrierSchedulingConfig |

### NR_DciCommon_BWPIndicator_Type

| TTCN-3 Union Type | | |
|---|---|---|
| **Name** | **NR_DciCommon_BWPIndicator_Type** | |
| **Comment** | Bandwidth part indicator according to TS 38.212 Table 7.3.1.1.2-1; used to address RRC-configured BandwidthPart-Config;<br>NOTE:<br>in general the BWP configuration at the SS is static i.e. dedicated BWPs may be preconfigured in a test case preamble =><br>a) BWP configuration at the SS is not always the same as at the UE and SS cannot determine the number of BWPs being configured at the UE from its BWP configuration.<br>b) The number and order of BWPs may differ at SS and UE.<br>c) The index used in the DCI's BWP indicator is not identical with the BWP-Id as the BWP indicator is the index in the UE's BWP array<br>=> in general the SS cannot determine the size and value of the DCI's BWP indicator but this need to be done in TTCN | |
| Index | bitstring | 0, 1 or 2 bits |

### NR_DciCommon_TpcCommand_Type

| TTCN-3 Union Type | | |
|---|---|---|
| **Name** | **NR_DciCommon_TpcCommand_Type** | |
| **Comment** | TPC Command Field according to TS 38.213 Table 7.1.1-1 and Table 7.2.1-1 | |
| Value | B2_Type | 2 bits; default value: '01'B (0 dB; accumulated TPC) |

### NR_DciCommon_UL_SUL_Indicator_Type

| TTCN-3 Union Type | | |
|---|---|---|
| **Name** | **NR_DciCommon_UL_SUL_Indicator_Type** | |
| **Comment** | TS 38.212 clause 7.3.1.1.1/2: UL/SUL indicator | |
| None | Null_Type | to be used when no SUL is configured |
| Value | B1_Type | UL/SUL indicator according to TS 38.212 Table 7.3.1.1.1-1 |

### NR_DciCommon_VrbPrbMapping_Type

| TTCN-3 Union Type | | |
|---|---|---|
| **Name** | **NR_DciCommon_VrbPrbMapping_Type** | |
| **Comment** | to specify how VRB-to-PRB mapping shall be controlled by DCI if applicable (see TS 38.212 Table 7.3.1.2.2-5 and where it is referred) | |
| None | Null_Type | 0 bit, applicable for format 1_0 when only resource allocation type 0 is configured |
| Index | B1_Type | 1 bit, index in TS 38.212 Table 7.3.1.2.2-5 indicating non-interleaved or interleaved VRB-to-PRB mapping according to TS 38.211 clause 6.3.1.7 |

### NR_DciCommon_TimeDomainResourceAssignment_Type

| TTCN-3 Union Type | | |
|---|---|---|
| **Name** | **NR_DciCommon_TimeDomainResourceAssignment_Type** | |
| **Comment** | Common type definition for UL/DL Resource allocation in time domain according to TS 38.214 clause 5.1.2.1 and 6.1.2.1 | |
| Index | bitstring | index of entry in SEQUENCE OF PUSCH/PDSCH-TimeDomainResourceAllocation provided e.g. by PUSCH/PDSCH-Config;<br>number of bits in a particular DCI depends on the size of the SEQUENCE OF PUSCH/PDSCH-TimeDomainResourceAllocation<br>(e.g. Time domain resource assignment is an empty bitstring ("B) when only one time-domain configuration is provided to the UE)<br>NOTE: PDSCH/PUSCH-Config overrules list in PDSCH/PUSCH-ConfigCommon |

### NR_DciFormat_X_1_SrsRequest_Type

| TTCN-3 Union Type | | |
|---|---|---|
| **Name** | **NR_DciFormat_X_1_SrsRequest_Type** | |
| **Comment** | TS 38.212 clause 7.3.1.2: SRS request | |
| SingleUL | B2_Type | 2 bits: Index of the SRS resource set to be used according to TS 38.212 Table 7.3.1.1.2-24 |
| UL_SUL | B3_Type | 3 bits: Index of the SRS resource set to be used according to TS 38.212 Table 7.3.1.1.2-24 plus first bit to distinguish UL/SUL |

### NR_DciFormat_X_1_DmrsSequenceInit_Type

| TTCN-3 Union Type | | |
|---|---|---|
| **Name** | **NR_DciFormat_X_1_DmrsSequenceInit_Type** | |
| **Comment** | TS 38.212 clause 7.3.1.1.2 (format 0_1) and clause 7.3.1.2.2 (format 1_1): DMRS sequence initialization | |
| None | Null_Type | 0 bit for format 0_1 and if transform precoder is enabled |
| Value | B1_Type | 1 bit else |

### NR_DciFormat_X_1_PriorityIndicator_Type

| TTCN-3 Union Type | | |
|---|---|---|
| **Name** | **NR_DciFormat_X_1_PriorityIndicator_Type** | |
| **Comment** | TS 38.212 clause 7.3.1.1.2 (format 0_1) and clause 7.3.1.2.2 (format 1_1): Priority indicator | |
| None | Null_Type | 0 bit no Priority indicator, if higher layer parameter priorityIndicatorDCI-0-1/priorityIndicatorDCI-1-1 is not configured |
| Value | B1_Type | 1 bit as defined in Clause 9 in TS 38.213. |

### NR_DciFormat_X_1_MinimumApplicableSchedulingOffset_Type

| TTCN-3 Union Type | | |
|---|---|---|
| **Name** | **NR_DciFormat_X_1_MinimumApplicableSchedulingOffset_Type** | |
| **Comment** | TS 38.212 clause 7.3.1.1.2 (format 0_1) and clause 7.3.1.2.2 (format 1_1): Minimum applicable scheduling offset indicator | |
| None | Null_Type | 0 bit no Minimum applicable scheduling offset indicator |
| Value | B1_Type | 1 bit if minimumSchedulingOffsetK2(format 0_1)/minimumSchedulingOffsetK0((format 1_1)) is configured. Set according to TS 38.212 according to TS 38.212 Table 7.3.1.1.2-33. |

**NR_DciFormat_X_1_SCellDormancyIndication_Type**

| TTCN-3 Union Type | | |
|---|---|---|
| **Name** | **NR_DciFormat_X_1_SCellDormancyIndication_Type** | |
| **Comment** | TS 38.212 clause 7.3.1.1.2 (format 0_1) and clause 7.3.1.2.2 (format 1_1): SCell dormancy indication | |
| None | Null_Type | 0 bit no SCell dormancy indication |
| Value | bitstring | 1, 2, 3, 4 or 5 bits: determined according to dormancyGroupWithinActiveTime parameter |

**NR_DciFormat_X_0_ChannelAccessCPext_Type**

| TTCN-3 Union Type | | |
|---|---|---|
| **Name** | **NR_DciFormat_X_0_ChannelAccessCPext_Type** | |
| **Comment** | TS 38.212 clause 7.3.1.1.1 and 7.3.1.2.1: ChannelAccess-CPext | |
| None | Null_Type | 0 bit no ChannelAccess-CPext |
| Value | B2_Type | 2 bits indicating combinations of channel access type and CP extension as defined in TS 38.212 Table 7.3.1.1.1-4 for operation in a cell with shared spectrum channel access. |

### D.1.3.2.4.2 Resource_Allocation

Type definitions for resource allocation which do not correpond directly to DCI fields but are used to configure how the SS maintains resource allocation for a given DCI

**Resource_Allocation: Basic Type Definitions**

| TTCN-3 Basic Types | | |
|---|---|---|
| **NR_ImcsValue_Type** | integer (0..31) | Modulation and coding scheme index coding |
| **NR_RedundancyVersion_Type** | integer (0..255) | Redundancy Version (RV):<br>- 2 bits if the number of scheduled PUSCH indicated by the Time domain resource assignment field is 1<br>- 2, 3, 4, 5, 6, 7 or 8 bits determined by the maximum number of schedulable PUSCHs among all entries in pusch-TimeDomainAllocationListForMultiPUSCH (TS 38.212 clause 7.3.1.1.2). |

### NR_ResourceAllocationType_Type

| TTCN-3 Enumerated Type | |
|---|---|
| **Name** | **NR_ResourceAllocationType_Type** |
| **Comment** | to specify the format of the resource allocation type being used for frequency domain resource assignment in DCI;<br>NOTE 1:<br>For DCI Format 0_0 and 1_0 only resourceAllocationType1 is applicable (TS 38.214 clause 5.1.2.2 and 6.1.2.2)<br>NOTE 2:<br>The SS needs to determine based on RRC configuration whether MSB of the frequency domain resource assignment needs to be used as discriminator for type 0/1<br>(see TS 38.212 clause 7.3.1.1.2 and clause 7.3.1.2.2 and PUSCH/PDSCH-Config.resourceAllocation)<br>NOTE 3:<br>The SS shall raise an error if the DCI configuration conflicts with the configuration given by PUSCH/PDSCH-Config.resourceAllocation |
| resourceAllocationType0 | resource allocation type 0 according to TS 38.214 clause 5.1.2.2.1 and 6.1.2.2.1:<br>bitmap indicating the Resource Block Groups (RBGs) that are allocated;<br>not applicable for DCI Format 0_0 and 1_0 |
| resourceAllocationType1 | resource allocation type 1 according to TS 38.214 clause 5.1.2.2.2 and 6.1.2.2.2:<br>resource indication value (RIV) corresponding to a starting virtual resource block and a length in terms of contiguously allocated resource blocks |

### NR_ModulationSchemePDSCH_Type

| TTCN-3 Enumerated Type | |
|---|---|
| **Name** | **NR_ModulationSchemePDSCH_Type** |
| **Comment** | Supported modulation schemes for PDSCH according to 38.211 Table 7.3.1.2-1 |
| qpsk | |
| qam16 | |
| qam64 | |
| qam256 | |

### NR_FreqDomainSchedulExplicit_Type

| TTCN-3 Record Type | | | |
|---|---|---|---|
| **Name** | **NR_FreqDomainSchedulExplicit_Type** | | |
| **Comment** | type used for explicit DL scheduling; Nprb is the exact number of RBs whereas in NR_FreqDomainSchedulCommon_Type MaxRbCnt is the upper bound | | |
| FirstRbIndex | integer | | index of the first resource block in frequency domain |
| Nprb | integer | | number of resource blocks to be assigned |

### NR_FreqDomainSchedulCommonDL_Type

| TTCN-3 Record Type | | | |
|---|---|---|---|
| **Name** | **NR_FreqDomainSchedulCommonDL_Type** | | |
| **Comment** | common type to specify restrictions for frequency domain scheduling by a start index and a maximum range of RBs<br>(similar to EUTRA, but for NR in general the frequency domain scheduling is not related to the whole frequency band but to a given band width part (BWP) | | |
| FirstRbIndex | integer | | index of the first (virtual) resource block in frequency domain |
| MaxRbCnt | integer | | maximum number of resource-blocks to be used for a transport block;<br>SS shall not assigned more than the given resource blocks;<br>FirstRbIndex + MaxRbCnt shall not exceed the total number of available resoource blocks in frequency domain; the SS shall raise an error otherwise |

### NR_FreqDomainResourceAssignmentDL_Type

| TTCN-3 Union Type | | |
|---|---|---|
| **Name** | **NR_FreqDomainResourceAssignmentDL_Type** | |
| **Comment** | | |
| Automatic | NR_FreqDomainSchedulCommonDL_Type | The SS shall automatically do the resource assignment needed for a DL transmission based on TBS evaluation guideline given in Annex B.1 of 38.523-3 |
| Explicit | NR_FreqDomainSchedulExplicit_Type | Frequency domain resource assignment is given explicitly by TTCN;<br>the SS needs to calculate the RIV (resource allocation type 1) or generate the bitmap (resource allocation type 0).<br>In case of resource allocation type 0 the allocation shall also be in consecutive RBGs.<br>NOTE: So far there is no requirement for signalling tests to use non-consecutive RBGs ((neither for LTE nor for NR) |

### NR_RedundancyVersionList_Type

| TTCN-3 Record of Type | |
|---|---|
| **Name** | **NR_RedundancyVersionList_Type** |
| **Comment** | There shall be as many entries in the list as re-transmissions are allowed;<br>if there are not enough elements specified SS shall raise an error;<br>In 4G at least in UL the array length corresponds to maxHARQ-Tx (i.e. up to 28 re-transmissions according to RRC ASN.1) |
| record of NR_RedundancyVersion_Type | |

### NR_TransportBlockSchedulingDL_Automatic_Type

| TTCN-3 Record Type | | | |
|---|---|---|---|
| **Name** | **NR_TransportBlockSchedulingDL_Automatic_Type** | | |
| **Comment** | transport block information for a DL transmission and potential retransmission in automatic mode | | |
| TransportBlock 1 | NR_ModulationSchemePDSCH_Type | | |
| TransportBlock 2 | NR_ModulationSchemePDSCH_Type | opt | MCS for 2nd transport block (if any); 'omit' means that there is no 2nd transport block;<br>presence corresponds to PDSCH-Config.maxNrofCodeWordsScheduledByDCI |
| RedundancyVersionList | NR_RedundancyVersionList_Type | opt | list of Redundancy versions to be used for DL transmission and possible retransmissions;<br>not present, if the DL transmission does not make use of harq processing (e.g. paging);<br>in automatic mode the same list of redundancy versions is used for both transport blocks;<br>if there are not enough elements to achieve successful DL transmission, SS shall raise an error |

### RetransmissionTiming_Type

| TTCN-3 Union Type | | |
|---|---|---|
| **Name** | **RetransmissionTiming_Type** | |
| **Comment** | to specify the timing of potential retransmissions related to the initial transmission.<br>Rules in case of necessary UL or DL retransmissions:<br>- When a transmission is scheduled with TimingInfo=Now, then any retransmission of a previous transmission takes precedence over the new transmission<br>- Re-transmissions take precedence over periodic UL grants<br>- The SS shall raise an error indication when<br>- a retransmission collides with another UL or DL transmisssion which is scheduled by TTCN with specific TimingInfo for the same slot as the retransmssion<br>- a new DL transmission would take over an ongoing DL transmission<br>- the retransmission is not possible at the given time for any other reason (e.g. due to slot format) | |
| SlotOffset | integer | the kth retransmission shall be k * SlotOffset slots after the initial transmission:<br>e.g. slots per subframe = N and initial transmission at subframeX and slotX =><br>1. retransmission at subframeX + (slotX + SlotOffset) / N and (slotX + SlotOffset) mod N<br>2. retransmission at subframeX + (slotX + 2*SlotOffset) / N and (slotX + 2*SlotOffset) mod N<br>and so on |
| SubframeOffset | integer | the kth retransmission shall be k * SubframeOffset subframes after the initial transmission in the same slot of subframe as for the initial transmission:<br>e.g. initial transmission at subframeX and slotX<br>1. retransmission at subframeX + SubframeOffset and slotX<br>2. retransmission at subframeX + 2*SubframeOffset and slotX<br>and so on |
| AnyTime | Null_Type | the SS shall autonomuously determine the next possible Ocassion for the retransmission |

### TransmissionTimingOffset_Type

| TTCN-3 Union Type | | |
|---|---|---|
| **Name** | **TransmissionTimingOffset_Type** | |
| **Comment** | Timing information for retransmissions | |
| None | Null_Type | initial transmission: no timing offset but timing info as according to common part of the ASP |
| Retransmission | RetransmissionTiming_Type | retransmission with timing offset relative to initial transmission |

### NR_TransportBlockSingleTransmission_Type

| TTCN-3 Record Type | | | |
|---|---|---|---|
| **Name** | **NR_TransportBlockSingleTransmission_Type** | | |
| **Comment** | TS 38.212 clause 7.3.1.2.1 and 7.3.1.2.2: parameters for transmission (or re-transmission) of a single transport block;<br>used for explicit mode of DL transmission and for UL grants | | |
| TimingOffset | TransmissionTimingOffset_Type | | in general "None" in case of a new transmission (i.e. no timing offset) and "Retransmission" for any retransmission |
| ImcsValue | NR_ImcsValue_Type | | Imcs value to be mapped to the Modulation and coding scheme field of DCI format 1_0 or 1_1 |
| RedundancyVersion | NR_RedundancyVersion_Type | | Redundancy version for a single transmission or re-transmission |
| ToggleNDI | boolean | | "true" for transmission of a new transport block, "false" for a re-transmission;<br>the NDI (New data indicator) itself is maintained by the SS and therefore not provided as configuration parameter |

### NR_TransportBlockRetransmissionList_Type

| TTCN-3 Record of Type | |
|---|---|
| **Name** | **NR_TransportBlockRetransmissionList_Type** |
| **Comment** | list of (initial) transmission and potential retransmissions;<br>used for explicit mode of DL transmission and for UL grants;<br>in general the Imcs is the same for all (re-)transmissions and the NDI is not toggled for the retransmissions |
| record of NR_TransportBlockSingleTransmission_Type | |

### NR_TransportBlockSchedulingDL_Explicit_Type

| TTCN-3 Record Type | | | |
|---|---|---|---|
| **Name** | **NR_TransportBlockSchedulingDL_Explicit_Type** | | |
| **Comment** | | | |
| TransportBlock 1 | NR_TransportBlockRetransmissionList_Type | | list of transmission and retransmissions for transport block 1 |
| TransportBlock 2 | NR_TransportBlockRetransmissionList_Type | opt | 'omit' means that there is no 2nd transport block;<br>Presence corresponds to PDSCH-Config.maxNrofCodeWordsScheduledByDCI |

### NR_TransportBlockSchedulingDL_Type

| TTCN-3 Union Type | | |
|---|---|---|
| **Name** | **NR_TransportBlockSchedulingDL_Type** | |
| **Comment** | | |
| Automatic | NR_TransportBlockSchedulingDL_Automatic_Type | |
| Explicit | NR_TransportBlockSchedulingDL_Explicit_Type | |

### NR_HarqProcessConfig_Type

| TTCN-3 Union Type | | |
|---|---|---|
| **Name** | **NR_HarqProcessConfig_Type** | |
| **Comment** | HARQ processes to be used automatically for UL grants or DL assignments | |
| None | Null_Type | when there is no HARQ for the given DCI (paging) |
| Broadcast | Null_Type | when the broadcast process shall be used |
| AnyProcess | Null_Type | The SS may choose any process for scheduling of the UL/DL data transfer |
| SpecificSubset | NR_HarqProcessList_Type | only the HARQ processes of this list shall be used automatically, other processes are excluded from automatic assignments; nevertheless for DL any HARQ processes may be addressed explicitly by NR_DRB_DataPerSlot_DL_Type.HarqProcess |

## D.1.3.2.4.3 PDSCH_Scheduling

### NR_DciDlInfo_Type

| TTCN-3 Record Type | | | |
|---|---|---|---|
| **Name** | **NR_DciDlInfo_Type** | | |
| **Comment** | scheduling for CCCH/DCCH/DTCH mapped to DL-SCH mapped to PDSCH;<br>for all parameters: mandatory for initial configuration of an instance, omit means "keep as it is" afterwards;<br>definition is applicable for DCI format 1_0 (C-RNTI, RA-RNTI, TC-RNTI) and DCI format 1_1 | | |
| ResoureAssignment | NR_DciFormat_1_X_ResourceAssignment_Type | opt | resource assignment; to control setting of the following fields in DCI formats 1_0 and 1_1 (TS 38.212 clause 7.3.1.2.1 and 7.3.1.2.2):<br>Frequency domain resource assignment<br>Time domain resource assignment<br>Modulation and coding scheme<br>New data indicator<br>Redundancy version<br>HARQ process number |
| VrbPrbMapping | NR_DciCommon_VrbPrbMapping_Type | opt | VRB-to-PRB mapping |
| Format | NR_DciFormat_1_X_SpecificInfo_Type | opt | DCI format and DCI format specific parameters |

### NR_DciFormat_1_X_ResourceAssignment_Type

| TTCN-3 Record Type | | | |
|---|---|---|---|
| **Name** | **NR_DciFormat_1_X_ResourceAssignment_Type** | | |
| **Comment** | Common definition to be used for resource scheduling in DL | | |
| ResourceAllocationType | NR_ResourceAllocationType_Type | opt | resource allocation type to be used for the frequency domain resource assignment |
| FreqDomain | NR_FreqDomainResourceAssignmentDL_Type | opt | |
| TimeDomain | NR_DciCommon_TimeDomainResourceAssignment_Type | opt | |
| TransportBlockScheduling | NR_TransportBlockSchedulingDL_Type | opt | information about MCS and RV for one or two transport blocks |
| HarqProcessConfig | NR_HarqProcessConfig_Type | opt | configures which HARQ processes the SS may use; corresponds to "HARQ process number" in TS 38.212 clause 7.3.1.2.1 and 7.3.1.2.2 |

### NR_DciFormat_1_X_SpecificInfo_Type

| TTCN-3 Union Type | | |
|---|---|---|
| **Name** | **NR_DciFormat_1_X_SpecificInfo_Type** | |
| **Comment** | | |
| Format_1_0 | NR_DciFormat_1_0_SpecificInfo_Type | |
| Format_1_0_P_RNTI | NR_DciFormat_1_0_P_RNTI_SpecificInfo_Type | |
| Format_1_0_SI_RNTI | NR_DciFormat_1_0_SI_RNTI_SpecificInfo_Type | |
| Format_1_0_RA_RNTI | NR_DciFormat_1_0_RA_RNTI_SpecificInfo_Type | |
| Format_1_1 | NR_DciFormat_1_1_SpecificInfo_Type | |

### NR_DciFormat_1_0_SpecificInfo_Type

| TTCN-3 Record Type | | | |
|---|---|---|---|
| **Name** | **NR_DciFormat_1_0_SpecificInfo_Type** | | |
| **Comment** | TS 38.212 clause 7.3.1.2.1: scheduling of PDSCH in one DL cell; default parameters according to TS 38.508-1 clause 4.3.6.1.2.1 | | |
| DAI | NR_DciFormat_1_0_DAI_Type | opt | downlink assignment index |
| TpcCommandPucch | NR_DciCommon_TpcCommand_Type | opt | TPC command for scheduled PUCCH; to be set to 1 per default (0 dB; accumulated TPC) |
| PucchResourceIndicator | NR_DciFormat_1_X_PucchResourceIndicator_Type | opt | PUCCH resource indicator |
| PdschHarqTimingIndicator | NR_DciFormat_1_X_PdschHarqTimingIndicator_Type | opt | PDSCH-to-HARQ_feedback timing indicator |
| ChannelAccessCPext | NR_DciFormat_X_0_ChannelAccessCPext_Type | opt | ChannelAccess-CPext |

### NR_DciFormat_1_0_P_RNTI_SpecificInfo_Type

| TTCN-3 Record Type | | | |
|---|---|---|---|
| **Name** | **NR_DciFormat_1_0_P_RNTI_SpecificInfo_Type** | | |
| **Comment** | TS 38.212 clause 7.3.1.2.1: scheduling of PDSCH with DCI scrambled by P-RNTI; default parameters according to TS 38.508-1 clause 4.3.6.1.2.1 | | |
| ShortMessageIndicator | B2_Type | opt | Short Message Indicator according to TS 38.212 Table 7.3.1.2.1-1 |
| ShortMessages | B8_Type | opt | Short Messages according to TS 38.331 Table 6.5-1 |
| TbScaling | B2_Type | opt | Scaling factor according to TS 38.214 Table 5.1.3.2-2 |

### NR_DciFormat_1_0_SI_RNTI_SpecificInfo_Type

| TTCN-3 Record Type | | | |
|---|---|---|---|
| **Name** | **NR_DciFormat_1_0_SI_RNTI_SpecificInfo_Type** | | |
| **Comment** | TS 38.212 clause 7.3.1.2.1: scheduling of PDSCH with DCI scrambled by SI-RNTI; default parameters according to TS 38.508-1 clause 4.3.6.1.2.1 | | |
| SystemInfoIndicator | B1_Type | opt | System information indicator according to TS 38.212 Table 7.3.1.2.1-2 |

### NR_DciFormat_1_0_RA_RNTI_SpecificInfo_Type

| TTCN-3 Record Type | | | |
|---|---|---|---|
| **Name** | **NR_DciFormat_1_0_RA_RNTI_SpecificInfo_Type** | | |
| **Comment** | TS 38.212 clause 7.3.1.2.1: scheduling of PDSCH with DCI scrambled by RA-RNTI; default parameters according to TS 38.508-1 clause 4.3.6.1.2.1.<br>FFS whether this is applicable to MsgB-RNTI | | |
| TbScaling | B2_Type | opt | Scaling factor according to TS 38.214 Table 5.1.3.2-2 |
| LSBsOfSFN | NR_DciFormat_1_0_LSBsOfSFN_Type | opt | LSBs of SFN |

## NR_DciFormat_1_1_SpecificInfo_Type

| TTCN-3 Record Type | | | |
|---|---|---|---|
| **Name** | **NR_DciFormat_1_1_SpecificInfo_Type** | | |
| **Comment** | TS 38.212 clause 7.3.1.2.2: scheduling of PDSCH in one cell; default parameters according to TS 38.508-1 clause 4.3.6.1.2.2<br>For all fields: 'omit' means that the information shall not be contained in the DCI on PDCCH | | |
| CarrierIndicator | NR_DciCommon_CarrierIndicator_Type | opt | Carrier indicator - CIF value for Cross Carrier Scheduling; 'None' otherwise |
| BWPIndicator | NR_DciCommon_BWPIndicator_Type | opt | Bandwidth part indicator |
| PrbBundlingSizeIndicator | NR_DciFormat_1_1_PrbBundlingSizeIndicator_Type | opt | PRB bundling size indicator |
| RateMatchingIndicator | NR_DciFormat_1_1_RateMatchingIndicator_Type | opt | Rate matching indicator |
| ZP_CSI_RS_Trigger | NR_DciFormat_1_1_ZP_CSI_RS_Trigger_Type | opt | ZP CSI-RS trigger |
| DAI | NR_DciFormat_1_1_DAI_Type | opt | downlink assignment index |
| TpcCommandPucch | NR_DciCommon_TpcCommand_Type | opt | TPC command for scheduled PUCCH; to be set to 1 per default (0 dB; accumulated TPC) |
| PucchResourceIndicator | NR_DciFormat_1_X_PucchResourceIndicator_Type | opt | PUCCH resource indicator |
| PdschHarqTimingIndicator | NR_DciFormat_1_X_PdschHarqTimingIndicator_Type | opt | PDSCH-to-HARQ_feedback timing indicator |
| OneShotHarqAckRequest | NR_DciFormat_1_1_OneShotHarqAckRequest_Type | opt | One-shot HARQ-ACK request |
| PdschGroupIndex | NR_DciFormat_1_1_PdschGroupIndex_Type | opt | PDSCH group index |
| NewFeedbackIndicator | NR_DciFormat_1_1_NewFeedbackIndicator_Type | opt | New feedback indicator |
| NumberRequestedPdschGroup | NR_DciFormat_1_1_NumberRequestedPdschGroup_Type | opt | Number of requested PDSCH group |
| AntennaPorts | NR_DciFormat_1_1_AntennaPorts_Type | opt | Antenna port(s) |
| TCI | NR_DciFormat_1_1_TCI_Type | opt | Transmission configuration indication |
| SrsRequest | NR_DciFormat_X_1_SrsRequest_Type | opt | SRS request |
| CBGTI | NR_DciFormat_1_1_CBGTI_Type | opt | CBG transmission information (CBGTI) |
| CBGFI | NR_DciFormat_1_1_CBGFI_Type | opt | CBG flushing out information (CBGFI) |
| DmrsSequenceInit | NR_DciFormat_X_1_DmrsSequenceInit_Type | opt | DMRS sequence initialization |
| PriorityIndicator | NR_DciFormat_X_1_PriorityIndicator_Type | opt | Priority indicator |
| ChannelAccessCPext | NR_DciFormat_1_1_ChannelAccessCPext_Type | opt | ChannelAccess-CPext |
| MinimumApplicableSchedulingOffset | NR_DciFormat_X_1_MinimumApplicableSchedulingOffset_Type | opt | Minimum applicable scheduling offset indicator |
| SCellDormancyIndication | NR_DciFormat_X_1_SCellDormancyIndication_Type | opt | SCell dormancy indication |

### NR_DciFormat_1_X_PucchResourceIndicator_Type

| TTCN-3 Union Type | | |
|---|---|---|
| **Name** | **NR_DciFormat_1_X_PucchResourceIndicator_Type** | |
| **Comment** | TS 38.212 clause 7.3.1.2.1/2: PUCCH resource indicator | |
| Value | B3_Type | 3 bits as defined in TS 38.213 clause 9.2.3 or reserved bits; index to "PUCCH-ResourceSet" according to 38.213 clause 9.2.3 as provided by PUCCH-Config |

### NR_DciFormat_1_X_PdschHarqTimingIndicator_Type

| TTCN-3 Union Type | | |
|---|---|---|
| **Name** | **NR_DciFormat_1_X_PdschHarqTimingIndicator_Type** | |
| **Comment** | TS 38.212 clause 7.3.1.2.1/2: PDSCH-to-HARQ_feedback timing indicator (TS 38.213 clause 9.2.3) | |
| Value | bitstring | Format 1_0: 3 bits, addresses one of {1, 2, 3, 4, 5, 6, 7, 8} according to TS 38.213 clause 9.2.3;<br>Format 1_1: 0..3 bits, addresses entry in table provided by PUCCH-Config.dl-DataToUL-ACK |

### NR_DciFormat_1_0_DAI_Type

| TTCN-3 Union Type | | |
|---|---|---|
| **Name** | **NR_DciFormat_1_0_DAI_Type** | |
| **Comment** | TS 38.212 clause 7.3.1.2.1: DAI (downlink assignment indicator) | |
| Index | DAI_B2_Type | 2 bits according to TS 38.213 clause 9.1.3 or reserved bits |

### NR_DciFormat_1_0_LSBsOfSFN_Type

| TTCN-3 Union Type | | |
|---|---|---|
| **Name** | **NR_DciFormat_1_0_LSBsOfSFN_Type** | |
| **Comment** | TS 38.212 clause 7.3.1.2.1: LSBs of SFN | |
| None | Null_Type | no LSBs of SFN |
| Automatic | Null_Type | LSBs of SFN automatically assigned by SS; 2 bits |

### NR_DciFormat_1_1_PrbBundlingSizeIndicator_Type

| TTCN-3 Union Type | | |
|---|---|---|
| **Name** | **NR_DciFormat_1_1_PrbBundlingSizeIndicator_Type** | |
| **Comment** | TS 38.212 clause 7.3.1.2.2: PRB bundling size indicator | |
| None | Null_Type | no PRB bundling |
| Dynamic | B1_Type | when PDSCH-Config.prb-BundlingType is set to 'dynamicBundling';<br>indicates which set of PRG values to be used (see 38.214 clause 5.1.2.3) |

### NR_DciFormat_1_1_RateMatchingIndicator_Type

| TTCN-3 Union Type | | |
|---|---|---|
| **Name** | **NR_DciFormat_1_1_RateMatchingIndicator_Type** | |
| **Comment** | TS 38.212 clause 7.3.1.2.2: Rate matching indicator;<br>rateMatchPatternGroup1 and rateMatchPatternGroup2 configured by PDSCH-Config | |
| Bitmap | bitstring | 0, 1, or 2 bits: bitmap indicating rateMatchPatternGroup1 and/or rateMatchPatternGroup2 to be applied;<br>size depending on whether rateMatchPatternGroup1, rateMatchPatternGroup2 or both are configured by PDSCH-Config at the UE |

### NR_DciFormat_1_1_ZP_CSI_RS_Trigger_Type

| TTCN-3 Union Type | | |
|---|---|---|
| **Name** | **NR_DciFormat_1_1_ZP_CSI_RS_Trigger_Type** | |
| **Comment** | TS 38.212 clause 7.3.1.2.2: ZP CSI-RS trigger | |
| Index | bitstring | 0, 1, or 2 bits: Index in list of ZP-CSI-RS-Resource as configured by PDSCH-Config at the UE |

### NR_DciFormat_1_1_DAI_Type

| TTCN-3 Union Type | | |
|---|---|---|
| **Name** | **NR_DciFormat_1_1_DAI_Type** | |
| **Comment** | TS 38.212 clause 7.3.1.2.2: DAI (downlink assignment indicator)<br>- 6 bits if more than one serving cell are configured in the DL and the higher layer parameter NFI-TotalDAI-Included-r16 = enable<br>- 4 bits if only one serving cell are configured in the DL and the higher layer parameter NFI-TotalDAI-Included-r16 = enable<br>- 4 bits if more than one serving cell are configured in the DL, the higher layer parameter pdsch-HARQ-ACK-Codebook=dynamic or pdsch-HARQ-ACK-Codebook=enhancedDynamic-r16, and NFI-TotalDAI-Included-r16 is not configured<br>- 4 bits if only one serving cell is configured in the DL, and the higher layer parameter pdsch-HARQ-ACK-Codebook=dynamic, and the UE is not provided CORESETPoolIndex or is provided CORESETPoolIndex with value 0 for one or more first CORESETs and is provided CORESETPoolIndex with value 1 for one or more second CORESETs, and is provided ACKNACKFeedbackMode = JointFeedback<br>- 2 bits if only one serving cell is configured in the DL, the higher layer parameter pdsch-HARQ-ACK-Codebook=dynamic or pdsch-HARQ-ACK-Codebook=enhancedDynamic-r16, and NFI-TotalDAI-Included-r16 is not configured, when the UE is not configured with CORESETPoolIndex or the value of CORESETPoolIndex is the same for all CORESETs if CORESETPoolIndex is provided or the UE is not configured with ACKNACKFeedbackMode = JointFeedback | |
| None | Null_Type | no DAI |
| TwoBits | DAI_B2_Type | |
| FourBits | DAI_B4_Type | |
| SixBits | DAI_B6_Type | |

### NR_DciFormat_1_1_AntennaPorts_Type

| TTCN-3 Union Type | | |
|---|---|---|
| **Name** | **NR_DciFormat_1_1_AntennaPorts_Type** | |
| **Comment** | TS 38.212 clause 7.3.1.2.2: Antenna ports as defined by TS 38.212 Tables 7.3.1.2.2-1..4 and Tables 7.3.1.2.2-1A/2A/3A/4A | |
| Index | bitstring | bitstring presentation of index to TS 38.212 Tables 7.3.1.2.2-1..4 and Tables 7.3.1.2.2-1A/2A/3A/4A |

### NR_DciFormat_1_1_TCI_Type

| TTCN-3 Union Type | | |
|---|---|---|
| **Name** | **NR_DciFormat_1_1_TCI_Type** | |
| **Comment** | TS 38.212 clause 7.3.1.2.2: Transmission configuration indication (TCI) | |
| None | Null_Type | if ControlResourceSet.tci-PresentInDCI does not indicate 'enabled' |
| Value | B3_Type | if ControlResourceSet.tci-PresentInDCI=='enabled': TCI according to TS 38.213 clause 5.1.5/6 |

### NR_DciFormat_1_1_CBGTI_Type

| TTCN-3 Union Type | | |
|---|---|---|
| **Name** | **NR_DciFormat_1_1_CBGTI_Type** | |
| **Comment** | TS 38.212 clause 7.3.1.2.2: CBG transmission information (CBGTI) | |
| Bitmap | bitstring | 0, 2, 4, 6, or 8 bits according to PDSCH-CodeBlockGroupTransmission.maxCodeBlockGroupsPerTransportBlock and PDSCH-Config.maxNrofCodeWordsScheduledByDCI and TS 38.214 clause 5.1.7.2 |

### NR_DciFormat_1_1_CBGFI_Type

| TTCN-3 Union Type | | |
|---|---|---|
| **Name** | **NR_DciFormat_1_1_CBGFI_Type** | |
| **Comment** | TS 38.212 clause 7.3.1.2.2: CBG flushing out information (CBGFI) | |
| None | Null_Type | no CBGFI |
| Flag | B1_Type | CBGFI flag, if codeBlockGroupTransmission is configured in PDSCH-ServingCellConfig with codeBlockGroupFlushIndicator set to true |

### NR_DciFormat_1_1_ChannelAccessCPext_Type

| TTCN-3 Union Type | | |
|---|---|---|
| **Name** | **NR_DciFormat_1_1_ChannelAccessCPext_Type** | |
| **Comment** | TS 38.212 clause 7.3.1.2.2: ChannelAccess-CPext | |
| None | Null_Type | no ChannelAccess-CPext |
| Value | bitstring | 1, 2, 3 or 4 bits. Determined with dl-DCI-triggered-UL-ChannelAccess-CPext-r16 and from Table 7.3.1.2.2-6. |

### DAI_B1_Type

| TTCN-3 Union Type | | |
|---|---|---|
| **Name** | **DAI_B1_Type** | |
| **Comment** | | |
| Index | B1_Type | 1 bit DAI value |
| Automatic | Null_Type | DAI automatically assigned by SS according to clause 7.1.2.1.3.3 |

### DAI_B2_Type

| TTCN-3 Union Type | | |
|---|---|---|
| **Name** | **DAI_B2_Type** | |
| **Comment** | | |
| Index | B2_Type | 2 bits DAI value |
| Automatic | Null_Type | DAI automatically assigned by SS according to clause 7.1.2.1.3.3 |

### DAI_B4_Type

| TTCN-3 Union Type | | |
|---|---|---|
| **Name** | **DAI_B4_Type** | |
| **Comment** | | |
| Index | B4_Type | 4 bits DAI value |
| Automatic | Null_Type | DAI automatically assigned by SS according to clause 7.1.2.1.3.3 |

### DAI_B6_Type

| TTCN-3 Union Type | | |
|---|---|---|
| **Name** | **DAI_B6_Type** | |
| **Comment** | | |
| Index | B6_Type | 6 bits DAI value |
| Automatic | Null_Type | DAI automatically assigned by SS according to clause 7.1.2.1.3.3 |

### NR_DciFormat_1_1_OneShotHarqAckRequest_Type

| TTCN-3 Union Type | | |
|---|---|---|
| **Name** | **NR_DciFormat_1_1_OneShotHarqAckRequest_Type** | |
| **Comment** | TS 38.212 clause 7.3.1.2.2: One-shot HARQ-ACK request | |
| None | Null_Type | no One-shot HARQ-ACK request |
| Value | B1_Type | 1 bit if higher layer parameter pdsch-HARQ-ACK-OneShotFeedback-r16 is configured |

### NR_DciFormat_1_1_PdschGroupIndex_Type

| TTCN-3 Union Type | | |
|---|---|---|
| **Name** | **NR_DciFormat_1_1_PdschGroupIndex_Type** | |
| **Comment** | TS 38.212 clause 7.3.1.2.2: PDSCH group index | |
| None | Null_Type | no PDSCH group index |
| Value | B1_Type | 1 bit if the higher layer parameter pdsch-HARQ-ACK-Codebook = enhancedDynamic-r16 |

### NR_DciFormat_1_1_NewFeedbackIndicator_Type

| TTCN-3 Union Type | | |
|---|---|---|
| **Name** | **NR_DciFormat_1_1_NewFeedbackIndicator_Type** | |
| **Comment** | TS 38.212 clause 7.3.1.2.2: New feedback indicator | |
| None | Null_Type | no New feedback indicator |
| Value | bitstring | 1 or 2 bits if pdsch-HARQ-ACK-Codebook = enhancedDynamic-r16 |

**NR_DciFormat_1_1_NumberRequestedPdschGroup_Type**

| TTCN-3 Union Type | | |
|---|---|---|
| **Name** | **NR_DciFormat_1_1_NumberRequestedPdschGroup_Type** | |
| **Comment** | TS 38.212 clause 7.3.1.2.2: Number of requested PDSCH group(s) | |
| None | Null_Type | no Number of requested PDSCH group(s) |
| Value | B1_Type | if the higher layer parameter pdsch-HARQ-ACK-Codebook = enhancedDynamic-r16 |

### D.1.3.2.4.4 PUSCH_Scheduling

**NR_DciUlInfo_Type**

| TTCN-3 Record Type | | | |
|---|---|---|---|
| **Name** | **NR_DciUlInfo_Type** | | |
| **Comment** | scheduling for CCCH/DCCH/DTCH mapped to UL-SCH mapped to PUSCH;<br>for all parameters: mandatory for initial configuration of an instance, omit means "keep as it is" afterwards | | |
| ResoureAssignment | NR_DciFormat_0_X_ResourceAssignment_Type | opt | resource assignment; to control setting of the following fields in DCI formats 0_0 and 0_1 (TS 38.212 clause 7.3.1.1.1 and 7.3.1.1.2):<br>Frequency domain resource assignment<br>Time domain resource assignment<br>Modulation and coding scheme<br>New data indicator<br>Redundancy version<br>HARQ process number |
| PuschHoppingCtrl | NR_DciFormat_0_X_PuschHoppingCtrl_Type | opt | control of frequency hopping in DCI formats 0_0 and 0_1 (TS 38.212 Table 7.3.1.1.1-3) |
| TpcCommandPusch | NR_DciCommon_TpcCommand_Type | opt | TPC command for scheduled PUSCH; to be set to 1 per default (0 dB; accumulated TPC) |
| UL_SUL_Indicator | NR_DciCommon_UL_SUL_Indicator_Type | opt | to control use of supplementary UL by DCI |
| Format | NR_DciFormat_0_X_SpecificInfo_Type | opt | DCI format and DCI format specific parameters |

### NR_DciFormat_0_X_ResourceAssignment_Type

| TTCN-3 Record Type | | | |
|---|---|---|---|
| **Name** | **NR_DciFormat_0_X_ResourceAssignment_Type** | | |
| **Comment** | Common definition to be used for resource scheduling in UL | | |
| ResourceAllocationType | NR_ResourceAllocationType_Type | opt | resource allocation type to be used for the frequency domain resource assignment |
| FreqDomain | NR_FreqDomainSchedulExplicit_Type | opt | explicit resource assignment: first RB, number of RBs; corresponds to "Frequency domain resource assignment" in TS 38.212 clause 7.3.1.1.1 and 7.3.1.1.2 |
| TimeDomain | NR_DciCommon_TimeDomainResourceAssignment_Type | opt | corresponds to "Time domain resource assignment" in TS 38.212 clause 7.3.1.1.1 and 7.3.1.1.2 |
| TransportBlockScheduling | NR_TransportBlockRetransmissionList_Type | opt | information about MCS and RV for transport block transmission and possible re-transmissions;<br>corresponds to "Modulation and coding scheme", "New data indicator" and "Redundancy version" in TS 38.212 clause 7.3.1.1.1 and 7.3.1.1.2 |
| HarqProcessConfig | NR_HarqProcessConfig_Type | opt | HARQ process to be used for the scheduled UL data transfer corresponds to "HARQ process number" in TS 38.212 clause 7.3.1.1.1 and 7.3.1.1.2;<br>NOTE: for 5G there is no synchronous HARQ anymore but HARQ is asynchronous even for UL<br>(TS 38.300 clause 5.3.5.4; TS 38.212 clause 7.3.1: 4-bit HARQ process number included in all DCI Formats for UL) |

### NR_DciFormat_0_X_SpecificInfo_Type

| TTCN-3 Union Type | | |
|---|---|---|
| **Name** | **NR_DciFormat_0_X_SpecificInfo_Type** | |
| **Comment** | | |
| Format_0_0 | NR_DciFormat_0_0_SpecificInfo_Type | |
| Format_0_1 | NR_DciFormat_0_1_SpecificInfo_Type | |

### NR_DciFormat_0_0_SpecificInfo_Type

| TTCN-3 Record Type | | | |
|---|---|---|---|
| **Name** | **NR_DciFormat_0_0_SpecificInfo_Type** | | |
| **Comment** | TS 38.212 clause 7.3.1.1: scheduling of PUSCH in one cell; default parameters according to TS 38.508-1 clause 4.3.6.1.1.1 | | |
| ChannelAccessCPext | NR_DciFormat_X_0_ChannelAccessCPext_Type | opt | ChannelAccess-CPext |

## NR_DciFormat_0_1_SpecificInfo_Type

| TTCN-3 Record Type | | | |
|---|---|---|---|
| **Name** | **NR_DciFormat_0_1_SpecificInfo_Type** | | |
| **Comment** | TS 38.212 clause 7.3.1.2: scheduling of PUSCH in one cell; default parameters according to TS 38.508-1 clause 4.3.6.1.1.2;<br>for all parameters: mandatory for initial configuration of an instance, omit means "keep as it is" afterwards | | |
| CarrierIndicator | NR_DciCommon_CarrierIndicator_Type | opt | Carrier indicator - CIF value for Cross Carrier Scheduling; 'None' otherwise |
| DfiFlag | NR_DciFormat_0_1_DfiFlag_Type | opt | DFI flag |
| BWPIndicator | NR_DciCommon_BWPIndicator_Type | opt | Bandwidth part indicator |
| FirstDAI | NR_DciFormat_0_1_FirstDAI_Type | opt | 1st downlink assignment index |
| SecondDAI | NR_DciFormat_0_1_SecondDAI_Type | opt | 2nd downlink assignment index |
| SrsResourceIndicator | NR_DciFormat_0_1_SrsResourceIndicator_Type | opt | SRS resource indicator |
| PrecodingInfo | NR_DciFormat_0_1_PrecodingInfo_Type | opt | Precoding information and number of layers |
| AntennaPorts | NR_DciFormat_0_1_AntennaPorts_Type | opt | Antenna ports |
| SrsRequest | NR_DciFormat_X_1_SrsRequest_Type | opt | SRS request |
| CsiRequest | NR_DciFormat_0_1_CsiRequest_Type | opt | CSI request |
| CBGTI | NR_DciFormat_0_1_CBGTI_Type | opt | CBG transmission information (CBGTI) |
| PtrsDmrsAssociation | NR_DciFormat_0_1_PtrsDmrsAssociation_Type | opt | PTRS-DMRS association |
| BetaOffsetIndicator | NR_DciFormat_0_1_BetaOffsetIndicator_Type | opt | beta_offset indicator |
| DmrsSequenceInit | NR_DciFormat_X_1_DmrsSequenceInit_Type | opt | DMRS sequence initialization |
| UlschIndicator | NR_DciFormat_0_1_UlschIndicator_Type | opt | UL-SCH indicator |
| ChannelAccessCPextCAPC | NR_DciFormat_0_1_ChannelAccessCPextCAPC_Type | opt | ChannelAccess-CPext-CAPC |
| OpenLoopPowerControl | NR_DciFormat_0_1_OpenLoopPowerControl_Type | opt | Open-loop power control parameter set indication |
| PriorityIndicator | NR_DciFormat_X_1_PriorityIndicator_Type | opt | Priority indicator |
| InvalidSymbolPatternIndicator | NR_DciFormat_0_1_InvalidSymbolPatternIndicator_Type | opt | Invalid symbol pattern indicator |
| MinimumApplicableSchedulingOffset | NR_DciFormat_X_1_MinimumApplicableSchedulingOffset_Type | opt | Minimum applicable scheduling offset indicator |
| SCellDormancyIndication | NR_DciFormat_X_1_SCellDormancyIndication_Type | opt | SCell dormancy indication |
| SidelinkAssignmentIndex | NR_DciFormat_0_1_SidelinkAssignmentIndex_Type | opt | Sidelink assignment index |

### NR_DciFormat_0_X_PuschHoppingCtrl_Type

| TTCN-3 Union Type | | |
|---|---|---|
| **Name** | **NR_DciFormat_0_X_PuschHoppingCtrl_Type** | |
| **Comment** | TS 38.212 7.3.1.1.1 (format 0_0) and 7.3.1.1.2 (format 0_1) | |
| None | Null_Type | DCI format 0_1 only: 0 bit if only resource allocation type 0 is configured or PUSCH-Config.frequencyHopping is not configured |
| Flag | B1_Type | 1 bit if resource allocation type 1 is configured (or type 0 and type 1)<br>'1'B to indicate frequency hopping according to TS 38.214 clause 6.3 |

### NR_DciFormat_0_1_FirstDAI_Type

| TTCN-3 Union Type | | |
|---|---|---|
| **Name** | **NR_DciFormat_0_1_FirstDAI_Type** | |
| **Comment** | TS 38.212 clause 7.3.1.1.2: First DAI (downlink assignment indicator) depending on PhysicalCellGroupConfig.pdsch-HARQ-ACK-Codebook | |
| SemiStaticCodebook | DAI_B1_Type | 1 bit according to TS 38.213 clause 9.1.2.2 for Type-1 HARQ-ACK (pdsch-HARQ-ACK-codebook=semi-static) |
| DynamicCodebook | DAI_B2_Type | 2 bits according to TS 38.213 Table 9.1.3-2 for Type-2 HARQ-ACK (pdsch-HARQ-ACK-codebook=dynamic or for enhanced dynamic HARQ-ACK codebook without UL-TotalDAI-Included-r16 configured) |
| EnhancedDynamicCodebook | DAI_B4_Type | 4 bits for enhanced dynamic HARQ-ACK codebook and with UL-TotalDAI-Included-r16 = "enable". |

### NR_DciFormat_0_1_SecondDAI_Type

| TTCN-3 Union Type | | |
|---|---|---|
| **Name** | **NR_DciFormat_0_1_SecondDAI_Type** | |
| **Comment** | TS 38.212 clause 7.3.1.1.2: Second DAI (downlink assignment indicator) depending on PhysicalCellGroupConfig.pdsch-HARQ-ACK-Codebook | |
| None | Null_Type | no 2nd DAI |
| DynamicCodebook | DAI_B2_Type | 2 bits according to TS 38.213 Table 9.1.3-2 for Type-2 HARQ-ACK (pdsch-HARQ-ACK-codebook=dynamic or for enhanced dynamic HARQ-ACK codebook with two HARQ-ACK sub-codebooks and without UL-TotalDAI-Included-r16 configured) |
| EnhancedDynamicCodebook | DAI_B4_Type | 4 bits for enhanced dynamic HARQ-ACK codebook with two HARQ-ACK sub-codebooks and with UL-TotalDAI-Included-r16 = "enable" |

### NR_DciFormat_0_1_SrsResourceIndicator_Type

| TTCN-3 Union Type | | |
|---|---|---|
| **Name** | **NR_DciFormat_0_1_SrsResourceIndicator_Type** | |
| **Comment** | TS 38.212 clause 7.3.1.1.2: SRS resource indicator depending on PUSCH-Config.txConfig | |
| NonCodeBook | bitstring | txConfig==NonCodeBook: bitstring of 0..3 bits according to TS 38.212 Tables 7.3.1.1.2-28/29/30/31<br>(according to TS 38.331 clause 6.3.2 "SRS-Config" there are at most 4 entries with usage==nonCodebook) |
| CodeBook | bitstring | txConfig==CodeBook:<br>- bitstring of 0 or 1 bits according to TS 38.212 Table 7.3.1.1.2-32<br>- bitstring of 4 bits according to TS 38.212 Table 7.3.1.1.2-32A/32B if ul-FullPowerTransmission-r16 is configured<br>(according to TS 38.331 clause 6.3.2 "SRS-Config" there are at most 2 entries with usage==codebook) |

### NR_DciFormat_0_1_PrecodingInfo_Type

| TTCN-3 Union Type | | |
|---|---|---|
| **Name** | **NR_DciFormat_0_1_PrecodingInfo_Type** | |
| **Comment** | TS 38.212 clause 7.3.1.1.2: Precoding information and number of layers depending on PUSCH-Config.txConfig | |
| NonCodeBook | Null_Type | txConfig==NonCodeBook: 0 bits |
| CodeBook | bitstring | txConfig==CodeBook: bitstring according to TS 38.212 Tables 7.3.1.1.2-2..5; empty string for one antenna port only |

### NR_DciFormat_0_1_AntennaPorts_Type

| TTCN-3 Union Type | | |
|---|---|---|
| **Name** | **NR_DciFormat_0_1_AntennaPorts_Type** | |
| **Comment** | TS 38.212 clause 7.3.1.1.2: Antenna ports depending (mainly) on<br>- PUSCH-Config.transformPrecoder,<br>- DMRS-UplinkConfig.dmrs-Type,<br>- DMRS-UplinkConfig.maxLength,<br>- dmrs-UplinkTransformPrecoding-r16,<br>- tp-pi2BPSK | |
| Index | bitstring | bitstring presentation of index to Tables 7.3.1.1.2-6..23 |

### NR_DciFormat_0_1_CsiRequest_Type

| TTCN-3 Union Type | | |
|---|---|---|
| **Name** | **NR_DciFormat_0_1_CsiRequest_Type** | |
| **Comment** | TS 38.212 clause 7.3.1.1.2: CSI request | |
| Index | bitstring | 0, 1, 2, 3, 4, 5, or 6 bits determined by CSI-MeasConfig.reportTriggerSize; TS 38.214 clause 5.2.1.5.1) |

### NR_DciFormat_0_1_CBGTI_Type

| TTCN-3 Union Type | | |
|---|---|---|
| **Name** | **NR_DciFormat_0_1_CBGTI_Type** | |
| **Comment** | TS 38.212 clause 7.3.1.1.2: CBG transmission information (CBGTI) | |
| Index | bitstring | 0, 2, 4, 6, or 8 bits determined by PUSCH-CodeBlockGroupTransmission.maxCodeBlockGroupsPerTransportBlock configured by PUSCH-ServingCellConfig |

### NR_DciFormat_0_1_PtrsDmrsAssociation_Type

| TTCN-3 Union Type | | |
|---|---|---|
| **Name** | **NR_DciFormat_0_1_PtrsDmrsAssociation_Type** | |
| **Comment** | TS 38.212 clause 7.3.1.1.2: PTRS-DMRS association | |
| None | Null_Type | 0 bit PTRS-UplinkConfig is not configured in either dmrs-UplinkForPUSCH-MappingTypeA or dmrs-UplinkForPUSCH-MappingTypeB and transform precoder is disabled, or if transform precoder is enabled, or if maxRank=1 |
| Value | B2_Type | 2 bits according to TS 38.212 Table 7.3.1.1.2-25 and 7.3.1.1.2-26 |

### NR_DciFormat_0_1_BetaOffsetIndicator_Type

| TTCN-3 Union Type | | |
|---|---|---|
| **Name** | **NR_DciFormat_0_1_BetaOffsetIndicator_Type** | |
| **Comment** | TS 38.212 clause 7.3.1.1.2: beta_offset indicator | |
| None | Null_Type | 0 bit if uci-on-PUSCH != dynamic (ConfiguredGrantConfig.uci-OnPUSCH |
| Value | B2_Type | 2 bits according to TS 38.213 Table 9.3-3 and Table 9.3-3A |

### NR_DciFormat_0_1_UlschIndicator_Type

| TTCN-3 Union Type | | |
|---|---|---|
| **Name** | **NR_DciFormat_0_1_UlschIndicator_Type** | |
| **Comment** | TS 38.212 clause 7.3.1.1.2: UL-SCH indicator | |
| None | Null_Type | 0 bit if the number of scheduled PUSCH indicated by the Time domain resource assignment field is larger than 1 |
| Value | B1_Type | 1 bit: "1" indicates UL-SCH shall be transmitted on the PUSCH, "0" indicates UL-SCH shall not be transmitted on the PUSCH. Except for DCI format 0_1 with CRC scrambled by SP-CSI-RNTI, a UE is not expected to receive a DCI format 0_1 with UL-SCH indicator of "0" and CSI request of all zero(s). |

### NR_DciFormat_0_1_DfiFlag_Type

| TTCN-3 Union Type | | |
|---|---|---|
| **Name** | **NR_DciFormat_0_1_DfiFlag_Type** | |
| **Comment** | TS 38.212 clause 7.3.1.1.2: DFI flag indicator | |
| None | Null_Type | 0 bit no DFI flag indicator |
| Flag | B1_Type | 1 bit: if the UE is configured to monitor DCI format 0_1 with CRC scrambled by CS-RNTI and for operation in a cell with shared spectrum channel access. |

### NR_DciFormat_0_1_ChannelAccessCPextCAPC_Type

| TTCN-3 Union Type | | |
|---|---|---|
| **Name** | **NR_DciFormat_0_1_ChannelAccessCPextCAPC_Type** | |
| **Comment** | TS 38.212 clause 7.3.1.1.2: ChannelAccess-CPext-CAPC | |
| None | Null_Type | 0 bit: no ChannelAccess-CPext-CAPC |
| Value | bitstring | 1, 2, 3, 4, 5 or 6 bits.<br>One or more entries from Table 7.3.1.1.2-35 are configured by the higher layer parameter ul-dci-triggered-UL-ChannelAccess-CPext-CAPC-r16 |

### NR_DciFormat_0_1_OpenLoopPowerControl_Type

| TTCN-3 Union Type | | |
|---|---|---|
| **Name** | **NR_DciFormat_0_1_OpenLoopPowerControl_Type** | |
| **Comment** | TS 38.212 clause 7.3.1.1.2: Open-loop power control parameter set indication | |
| None | Null_Type | 0 bit no Open-loop power control parameter set indication |
| Value | bitstring | 1 or 2 bits<br>- 1 bit if SRS resource indicator is present in the DCI format 0_1;<br>- 1 or 2 bits as determined by higher layer parameter olpc-ParameterSetForDCI-Format0-1 if SRS resource indicator is not present in the DCI format 0_1. |

**NR_DciFormat_0_1_InvalidSymbolPatternIndicator_Type**

| TTCN-3 Union Type | | |
|---|---|---|
| **Name** | **NR_DciFormat_0_1_InvalidSymbolPatternIndicator_Type** | |
| **Comment** | TS 38.212 clause 7.3.1.1.2: Invalid symbol pattern indicator | |
| None | Null_Type | 0 bit no Invalid symbol pattern indicator |
| Value | B1_Type | 1 bit as defined in Clause 6.1.2.1 in TS 38.214 |

**NR_DciFormat_0_1_SidelinkAssignmentIndex_Type**

| TTCN-3 Union Type | | |
|---|---|---|
| **Name** | **NR_DciFormat_0_1_SidelinkAssignmentIndex_Type** | |
| **Comment** | TS 38.212 clause 7.3.1.1.2: Sidelink assignment index | |
| None | Null_Type | 0 bit no Sidelink assignment index |
| Value | bitstring | 1 or 2 bits: 1 bit if the UE is configured with pdsch-HARQ-ACK-Codebook = semi-static ; 2 bits if the UE is configured with pdsch-HARQ-ACK-Codebook = dynamic |

## D.1.3.3 MAC_Layer

Configuration for MAC procedures according to TS 38.321 clause 5 and related physical layer configuration

### D.1.3.3.1 MAC_Layer_Common

**MAC_Layer_Common: Basic Type Definitions**

| TTCN-3 Basic Types | | |
|---|---|---|
| **NR_TimingAdvanceIndex_Type** | integer (0..63) | acc. to TS 38.321, clause 6.1.3.4 "Timing Advance Command MAC CE" and TS 38.213 clause 4.2 "Transmission timing adjustments" |
| **NR_TimingAdvance_Period_Type** | integer (400, 600, 1020, 1530, 2040, 4090, 8190) | the values correspond to 80 % of TimeAlignmentTimer (acc. to TS 38.523-3, clause 6.3.2):<br>ms500, ms750, ms1280, ms1920, ms2560, ms5120, ms10240 rounded to nearest multiple of 10 |

**NR_UplinkTimeAlignment_AutoSynch_Type**

| TTCN-3 Record Type | | | |
|---|---|---|---|
| **Name** | **NR_UplinkTimeAlignment_AutoSynch_Type** | | |
| **Comment** | Parameters for automatic synchronisation of UL time alignment;<br>The SS shall periodically transmit TA MAC control elements according to 38.321 clause 6.1.3.4 with<br>- TAG-Id=0 for the SpCell<br>- TAG-Id as configured for an SCell<br>the transmission shall be continuously until being stopped | | |
| TimingAdvance | NR_TimingAdvanceIndex_Type | | amount of timing adjustment that MAC entity has to apply |
| TA_Period | NR_TimingAdvance_Period_Type | | time period after which TA MAC control elements need to be automatically transmitted |

**NR_UplinkTimeAlignment_Synch_Type**

| TTCN-3 Union Type | | |
|---|---|---|
| **Name** | **NR_UplinkTimeAlignment_Synch_Type** | |
| **Comment** | Configuration of Time Alignment of the UL | |
| None | Null_Type | no PUCCH Synchronisation applied |
| Auto | NR_UplinkTimeAlignment_AutoSynch_Type | SS automatically maintains PUCCH synchronization at UE |

### D.1.3.3.2 Random_Access_Procedure

**NR_RachProcedureConfig_Type**

| TTCN-3 Record Type | | | |
|---|---|---|---|
| **Name** | **NR_RachProcedureConfig_Type** | | |
| **Comment** | parameters to control the random access procedure; TS 38.321, clause 5.1. When SUL is configured, SS shall monitor UE RACH transmissions on both uplink and supplementary uplink carriers.<br>NOTE: RACH-ConfigCommon and RACH-ConfigDedicated are contained in NR_UplinkBWP_Type already (RACH-ConfigCommon as part of BWP-UplinkCommon).<br>When supplementary uplink is configured, RACH-ConfigCommon and RACH-ConfigDedicated are contained in the fields Uplink and SupplementaryUplink. | | |
| RachProcedure List | NR_RachProcedureList_Type | opt | in normal cases there is one element which is used for any RA procedure |

**NR_RachProcedureList_Type**

| TTCN-3 Record of Type | |
|---|---|
| **Name** | **NR_RachProcedureList_Type** |
| **Comment** | to simulate RACH procedure with one or more than one attempt by the UE:<br>There is one element in the list per PRACH Preamble attempt |
| record of NR_RachProcedure_Type | |

**NR_RachProcedure_Type**

| TTCN-3 Record Type | | | |
|---|---|---|---|
| **Name** | **NR_RachProcedure_Type** | | |
| **Comment** | | | |
| RandomAccessResponse | NR_RandomAccessResponseConfig_Type | opt | configures how the SS shall react on a PRACH Preamble attempt, in general:<br>- RAR with RAPID matching the RAPID of the UE's PRACH Preamble<br>- RAR with RAPID not matching the RAPID of the UE's PRACH Preamble<br>- BackoffIndicator<br>- no response at all |
| ContentionResolution | NR_ContentionResolutionCtrl_Type | opt | Random Access Procedure may be<br>1. Contention free (Non-contention based) => no contention resolution<br>2. Contention based (see TS 38.321 clause 5.1.5):<br>2a) C-RNTI based:<br>Msg3 contains MAC C-RNTI control element and in general contention resolution is done by assignment of an UL grant for this C-RNTI<br>2b) UE Contention Resolution Identity based:<br>Msg3 contains RRC message to setup or restore RRC connection<br>=> contention resolution is done by sending of Msg4 with UE Contention Resolution Identity MAC CE |

### D.1.3.3.2.1 Random_Access_Response

**Random_Access_Response: Basic Type Definitions**

| TTCN-3 Basic Types | | |
|---|---|---|
| **NR_RACH_TimingAdvance_Type** | integer (0..3846) | 12 bit value corresponding to Timing Advance Command field of the Random Access Response (TS 38.321 clause 6.2.3): 0..3846 according to TS 38.213 clause 4.2) |
| **NR_RAR_BackoffIndicator_Type** | integer (0..15) | MAC subPDU for Backoff Indicator only according to TS 38.321 clause 6.1.5 |

## NR_RAR_UplinkGrant_Type

| TTCN-3 Record Type | | | |
|---|---|---|---|
| **Name** | **NR_RAR_UplinkGrant_Type** | | |
| **Comment** | 27 bits according to TS 38.213 Table 8.2-1 and TS 38.321 Figure 6.2.3-1 | | |
| HoppingFlag | B1_Type | | Hopping flag |
| Msg3FrequencyResourceAllocation | B14_Type | | Msg3 PUSCH frequency resource allocation:<br>RIV value as defined in TS 38.213 clause 8.2 and TS 38.214 clause 6.1.2.2.2 |
| Msg3TimeResourceAllocation | B4_Type | | Msg3 PUSCH time resource allocation similar to the Time-domain resource assignment field of DCI format 0_0:<br>index addressing an entry of the applicable PUSCH time domain resource allocation table as specified in TS 38.214 clause 6.1.2.1.1;<br>the timing between the RAR and Msg3 is given by K2 (as in the time domain resource allocation table) and a delta value as according to Table 6.1.2.1.1-5 in TS 38.214.<br>It is the responsibility of SS implementation to send the RAR in an appropriate DL slot so that the corresponding Msg3 transmission is scheduled for a valid UL slot; it is responsibility of test specification to provide a correct K2 value for the given numerology. |
| MCS | B4_Type | | Modulation and Coding Scheme: first sixteen indices of the applicable MCS index table for PUSCH (TS 38.214 Table 6.1.4.1-1) |
| TPC_Command | B3_Type | | TPC command for Msg3 PUSCH |
| CQI_Req | B1_Type | | CQI request |

## NR_TempC_RNTI_Type

| TTCN-3 Union Type | | |
|---|---|---|
| **Name** | **NR_TempC_RNTI_Type** | |
| **Comment** | | |
| SameAsC_RNTI | Null_Type | in the RA response SS shall use the same C-RNTI as configured in NR_CellConfigCommon_Type;<br>this is useful for initial random access |
| Explicit | RNTI_Value_Type | in the RA response SS shall use different value as configured in NR_CellConfigCommon_Type;<br>this can be used when the UE already is in RRC_CONNECTED to have a temporary C-RNTI different from the one used by the UE;<br>NOTE: when the UE is not in RRC_CONNECTED there shall be no explicit temp. C-RNTI since then the UE would assume this value as C-RNTI |

### NR_RAR_Payload_Type

| TTCN-3 Record Type | | | |
|---|---|---|---|
| **Name** | **NR_RAR_Payload_Type** | | |
| **Comment** | MAC payload for Random Access Response according to TS 38.321 clause 6.2.3 | | |
| TimingAdvance | NR_RACH_TimingAdvance_Type | | timing advance: TS 38.321 clause 6.2.3 and TS 38.213 clause 4.2<br>NOTE:<br>timing advance has impact not only on the RA procedure;<br>SS in general needs to adjust its timing accordingly |
| UplinkGrant | NR_RAR_UplinkGrant_Type | | initial UL grant |
| TempC_RNTI | NR_TempC_RNTI_Type | | NOTE:<br>In general for initial Random Access Procedure TempC_RNTI shall be 'SameAsC_RNTI'<br>For Random Access Procedure in RRC_CONNECTED state the NW assigns a temporary C-RNTI which is replaced by the one stored at the UE;<br>=> TempC_RNTI may be 'SameAsC_RNTI' (in this case temp. C-RNTI and C-RNTI are equal what is not likely in a real network), or there is an explicit temp. C-RNTI what is used during RA procedure only (as in a real network) |

### NR_RAR_RapIdOnly_Type

| TTCN-3 Record Type | | | |
|---|---|---|---|
| **Name** | **NR_RAR_RapIdOnly_Type** | | |
| **Comment** | MAC subPDU for RAPID only (acknowledgment for SI request) according to TS 38.321 clause 6.1.5 | | |
| RapId | RAR_RapIdCtrl_Type | | |

### NR_RAR_RapIdAndPayload_Type

| TTCN-3 Record Type | | | |
|---|---|---|---|
| **Name** | **NR_RAR_RapIdAndPayload_Type** | | |
| **Comment** | MAC subPDU for RAPID and RAR payload according to TS 38.321 clause 6.1.5 | | |
| RapId | RAR_RapIdCtrl_Type | | |
| Payload | NR_RAR_Payload_Type | | |

### NR_RAR_SubPdu_Type

| TTCN-3 Union Type | | |
|---|---|---|
| **Name** | **NR_RAR_SubPdu_Type** | |
| **Comment** | Random Access Response sub-PDU according to TS 38.321 clause 6.1.5 | |
| BackoffIndicator | NR_RAR_BackoffIndicator_Type | |
| RapIdOnly | NR_RAR_RapIdOnly_Type | |
| RapIdAndPayload | NR_RAR_RapIdAndPayload_Type | |

### NR_RAR_SubPduList_Type

| TTCN-3 Record of Type | |
|---|---|
| **Name** | **NR_RAR_SubPduList_Type** |
| **Comment** | list of MAC subPDUs; if a Backoff Indicator is included it has to be the first element (TS 38.321 clause 6.1.5) |
| record of NR_RAR_SubPdu_Type | |

### NR_RAR_MacPdu_Type

| TTCN-3 Record Type | | | |
|---|---|---|---|
| **Name** | **NR_RAR_MacPdu_Type** | | |
| **Comment** | | | |
| SubPduList | NR_RAR_SubPduList_Type | opt | list of Backoff Indicator (optional) and random access responses; empty list if no RAR shall be sent at all (omit means "keep as it is" as usual) |
| CrcError | boolean | opt | if set, MAC PDU shall transmitted with CRC bits (0-3) being toggled |

### NR_RandomAccessResponseConfig_Type

| TTCN-3 Record Type | | | |
|---|---|---|---|
| **Name** | **NR_RandomAccessResponseConfig_Type** | | |
| **Comment** | configuration for Random Access Response mapped to DL-SCH mapped to PDSCH | | |
| SearchSpaceAndDci | NR_SearchSpaceDlDciAssignment_Type | opt | in general a RACH procedure is expected at the BWP currently being configured as active BWP at the SS;<br>Type1-PDCCH common search space is used for scheduling of the Random Access Response (Msg2) |
| MacPdu | NR_RAR_MacPdu_Type | opt | MAC PDU to be sent automatically by the SS when there has been a RACH preamble |

#### D.1.3.3.2.2 Contention_Resolution

### NR_ContentionResolutionCtrl_Type

| TTCN-3 Union Type | | |
|---|---|---|
| **Name** | **NR_ContentionResolutionCtrl_Type** | |
| **Comment** | | |
| None | Null_Type | no contention resolution: e.g. in case of contention free random access procedure or for special cases of contention based random access procedure |
| CRNTI_Based | NR_SearchSpaceUlDciAssignment_Type | contention resolution based on C-RNTI on PDCCH: The SS assigns UL grant on PDCCH;<br>the UL grant is scrambled by C-RNTI and associated with the UE-specific search space |
| Msg4_Based | NR_RachProcedureMsg4_Type | contention resolution based on UE Contention Resolution Identity on DL-SCH |

### NR_RachProcedureMsg4_Type

| TTCN-3 Record Type | | | |
|---|---|---|---|
| **Name** | **NR_RachProcedureMsg4_Type** | | |
| **Comment** | Msg4 of the RACH procedure in case of contention resolution based on UE Contention Resolution Identity | | |
| SearchSpaceAndDci | NR_SearchSpaceDlDciAssignment_Type | opt | DCI to be used for Msg4; the DCI is scrambled by the temporary C-RNTI and associated with the Type1-PDCCH common search space |
| ContentionResolutionId | NR_ContentionResolutionId_Type | opt | Contention Resolution Id contained in MAC PDU of Msg4 |
| RrcPdu | NR_RachProcedureMsg4RrcMsg_Type | opt | RRC message to be contained in Msg4 of the RACH procedure |
| CrcError | boolean | opt | if set, MAC PDU shall transmitted with CRC bits (0-3) being toggled |

**NR_ContentionResolutionId_Type**

| TTCN-3 Union Type | | |
|---|---|---|
| **Name** | **NR_ContentionResolutionId_Type** | |
| **Comment** | | |
| XorMask | B48_Type | When SS receives Contention Resolution ID from the UE,<br>SS shall XOR it with the given mask and use this as Contention Resolution ID;<br>this allows to get an unmatching Contention Resolution ID;<br>in normal cases mask shall be set to tsc_ContentionResolutionId_Unchanged<br>(i.e. the Contention Resolution ID remains unchanged)<br>NOTE: In case of UL_CCCH1_Message the contention resolution id shall be cut down to the first 48 bits according to TS 38.321 clause 6.1.3.3 |
| None | Null_Type | MAC Contention Resolution Control Element is not contained in the MAC PDU sent out as response for Msg3 |

**NR_RachProcedureMsg4RrcMsg_Type**

| TTCN-3 Union Type | | |
|---|---|---|
| **Name** | **NR_RachProcedureMsg4RrcMsg_Type** | |
| **Comment** | | |
| RrcCcchMsg | octetstring | encoded RRC message for CCCH; LCID=000000 for CCCH |
| RrcDcchMsg | octetstring | encoded RRC message for DCCH; the SS shall<br>- apply integrity protection,<br>- add a PDCP header accordingly,<br>- add an AM RLC header,<br>- use LCID=000001 corresponding to SRB1 as logical channel id |
| None | Null_Type | Msg4 does not contain any RRC message, e.g. when RRC message is sent stand-alone in separate DL transmission |

## D.1.3.4 System_Information_Control

Primitive to configuration scheduling of system information on BCCH/BCH

**System_Information_Control: Basic Type Definitions**

| TTCN-3 Basic Types | | |
|---|---|---|
| **NR_BcchToPbchConfig_Type** | Null_Type | place holder for BCCH mapped to BCH mapped to PBCH:<br>MIB using fixed periodicity (80ms) and repetitions (80ms) according to TS 38.331 clause 5.2.1;<br>the position of SS/PBCH blocks in frequency and time domain is specified in TS 38.211 clause 7.4.3 and TS 38.213 clause 4.1<br>the SS configuration for SS/PBCH blocks is defined by NR_SSB_Config_Type as part of physical layer configuration of a cell |

## NR_Sib1Schedul_Type

| TTCN-3 Record Type | | | |
|---|---|---|---|
| **Name** | **NR_Sib1Schedul_Type** | | |
| **Comment** | Scheduling of SIB1 (RMSI - Remaining Minimum SI, according to TS 38.300 clause 7.3):<br>fixed scheduling in time domain according to TS 38.331 clause 5.2.1<br>(periodicity: 160ms according to TS 38.331 clause 5.2.1) | | |
| SearchSpaceAndDci | NR_SearchSpaceDlDciAssignment_Type | opt | in general SIB scheduling is assigned to the initial BWP's Type0-PDCCH common search space (searchSpaceZero);<br>in principle SIB scheduling can be configured to happen simultaneously in more than one BWP (e.g. initial BWP and active BWP);<br>SIB1 scheduling may be stopped by not assigning any BWP (AssignedBWPs being empty) |
| Periodicity | integer | opt | SIB1 repetition transmission period in milliseconds.<br>According to TS 38.331 clause 5.2.1 the SIB1 repetition transmission period is 20 ms in case of SSB and CORESET multiplexing pattern 1;<br>for SSB and CORESET multiplexing pattern 2/3 it is the same as the SSB period |
| SlotOffsetList | IntegerList_Type | opt | List of slot offsets for SIB1:<br>For single beam configuration there is exactly one offset corresponding to the SSB index of the beam.<br>For multiple beam configuration with N beams, SIB1 may be scheduled per beam so that there can be up-to N SIB1-transmission per repetition period.<br>The offsets correspond to the SSB index of the respective beam as according to TS 38.213 clause 13:<br>For a repetition period of 20ms the offset is relative to start of frames with even SFN (i.e. SFN mod 2 = 0)<br>=> in terms of TS 38.213 clause 13 for a given SSB index the slot offset is<br>n0 when nO refers to a frame with even SFN<br>n0 + (number of slots per frame) when nO refers to a frame with odd SFN<br>A repetition period other than 20ms is not considered as long as there is no test requirement.<br>NOTE: the SIB1 scheduling for a given offset shall match the Type0-PDCCH common search space configuration as configured in the SearchSpaceArray of the BWP |

## NR_SingleSiSchedul_Type

| TTCN-3 Record Type | | | |
|---|---|---|---|
| **Name** | **NR_SingleSiSchedul_Type** | | |
| **Comment** | Scheduling for a single SI in its SI-window within a BWP (or even within several BWPs) | | |
| SearchSpaceAndDci | NR_SearchSpaceDlDciAssignment_Type | opt | in general SIB scheduling is assigned to the initial BWP's Type0A-PDCCH common search space;<br>nevertheless in principle scheduling can be configured to happen simultaneously in more than one BWP (e.g. initial BWP and active BWP) |
| SlotOffset | integer | opt | slot-offset within the SI-window |

### NR_OtherSiSchedul_Type

| TTCN-3 Record Type | | | |
|---|---|---|---|
| **Name** | **NR_OtherSiSchedul_Type** | | |
| **Comment** | Scheduling of other SI ("other SI" according to TS 38.300 clause 7.3):<br>specifies for a specific SI the scheduling and repetitions within its SI window | | |
| Periodicity | NR_SiPeriodicity_Type | opt | |
| Window | record of<br>NR_SingleSiSchedul_Type | opt | one or more repetitions within the si-window |

### NR_OtherSiSchedulList_Type

| TTCN-3 Record of Type | |
|---|---|
| **Name** | **NR_OtherSiSchedulList_Type** |
| **Comment** | |
| record of NR_OtherSiSchedul_Type | |

### NR_AllOtherSiSchedul_Type

| TTCN-3 Record Type | | | |
|---|---|---|---|
| **Name** | **NR_AllOtherSiSchedul_Type** | | |
| **Comment** | Scheduling of (all) other SI (i.e. SIB2 and above according to TS 38.300 clause 7.3) | | |
| WindowLength | NR_SiWindowLength_Type | opt | to calculate start of each SI window according to TS 38.331 clause 5.2.2.3.2 |
| SiList | NR_OtherSiSchedulList_Type | opt | list of scheduling info for the SIs containing one or more SIBs |
| SegmentedSiList | NR_OtherSiSchedulList_Type | opt | list of scheduling info for segmented SIs (e.g. SI containing SIB7 or SIB8);<br>corresponds to SegmentedSIs in NR_BcchInfo_Type: SS shall subsequently schedule the elements of the corresponding SegmentedSIs (NR_BcchInfo_Type);<br>SegmentedSiList[i] provides scheduling info for BcchInfo_Type's SegmentedSIs[i]<br>The kth element of SegmentedSIs[i] is sent at the following slot number from T0:<br>SlotOffset + ((N+i)* WindowLength) + k*Periodicity<br>with<br>k : kth element in SegmentedSIs[i], i.e. SegmentedSIs[i][k]<br>N : number of SI provided in SIs in NR_BcchInfo_Type<br>T0: start of the modification period<br>SlotOffset, Periodicity: scheduling info as given by SegmentedSiList[i] - in slots<br>WindowLength: provided in NR_AllOtherSiSchedul_Type - in slots |

### NR_BcchToPdschConfig_Type

| TTCN-3 Record Type | | | |
|---|---|---|---|
| **Name** | **NR_BcchToPdschConfig_Type** | | |
| **Comment** | configuration for BCCH mapped to DL-SCH mapped to PDSCH | | |
| Sib1Schedul | NR_Sib1Schedul_Type | opt | SIB1 scheduling |
| SiSchedul | NR_AllOtherSiSchedul_Type | opt | scheduling of other SI |

### NR_SI_List_Type

| TTCN-3 Record of Type | |
|---|---|
| **Name** | **NR_SI_List_Type** |
| **Comment** | list of system information messages |
| record of BCCH_DL_SCH_Message | |

### NR_SegmentedSI_List_Type

| TTCN-3 Record of Type | |
|---|---|
| **Name** | **NR_SegmentedSI_List_Type** |
| **Comment** | Each element is a list of segments; used for segmented SIBs<br>Used for SIB7/SIB8 segmentation |
| record of NR_SI_List_Type | |

### NR_BcchInfo_Type

| TTCN-3 Record Type | | | |
|---|---|---|---|
| **Name** | **NR_BcchInfo_Type** | | |
| **Comment** | Configuration of system information message contents to be scheduled at the SS | | |
| MIB | BCCH_BCH_Message | opt | TS 38.331, clause 6.2.1 BCCH-BCH-Message and clause 6.2.2 MIB;<br>NOTE:<br>the system frame number included in MIB needs to be handled and maintained by the system simulator;<br>that means that the system frame number being setup by TTCN shall be ignored and overwritten by the SS |
| SIB1 | BCCH_DL_SCH_Message | opt | TS 38.331, clause 6.2.1 BCCH-DL-SCH-Message and clause 6.2.2 SIB1 |
| SIs | NR_SI_List_Type | opt | list of SIs corresponding to SiList of NR_AllOtherSiSchedul_Type (i.e. element i of NR_AllOtherSiSchedul_Type's SiList specifies the scheduling for SIs[i]) |
| SegmentedSIs | NR_SegmentedSI_List_Type | opt | list of SIs containing segmented SIBs;<br>corresponds to SegmentedSiList in NR_AllOtherSiSchedul_Type |

### NR_BcchConfig_Type

| TTCN-3 Record Type | | | |
|---|---|---|---|
| **Name** | **NR_BcchConfig_Type** | | |
| **Comment** | Configuration of system information scheduling and content at the SS | | |
| Pbch | NR_BcchToPbchConfig_Type | opt | |
| Pdsch | NR_BcchToPdschConfig_Type | opt | |
| BcchInfo | NR_BcchInfo_Type | opt | |

## D.1.3.5 Paging_Control

Primitive to configuration PCCH/PCH

**NR_PcchConfig_Type**

| TTCN-3 Record Type | | | |
|---|---|---|---|
| **Name** | **NR_PcchConfig_Type** | | |
| **Comment** | configuration for PCCH mapped to PCH mapped to PDSCH | | |
| SearchSpaceAndDci | NR_SearchSpaceDlDciAssignment_Type | opt | in general Paging happens at the BWP currently being configured as active BWP at the SS and Type2-PDCCH common search space is used for scheduling;<br>NOTE 1: there is no use case to schedule Paging simultaneously in multiple BWPs<br>NOTE 2: the DCI may or may not carry a short message but it in any case it shall indicate presence of the paging<br>(to send only a short message the "DciTrigger" primitive shall be used) |

## D.1.3.6 CCCH_DCCH_DTCH_Configuration

**NR_DcchDtchConfigDL_Type**

| TTCN-3 Record Type | | | |
|---|---|---|---|
| **Name** | **NR_DcchDtchConfigDL_Type** | | |
| **Comment** | configuration for DCCH/DTCH mapped to DL-SCH mapped to DL-SCH mapped to PDSCH;<br>NOTE: in contrast to EUTRA the configuration of HARQ processes to be used is done as part of DCI configuration | | |
| SearchSpaceAndDci | NR_SearchSpaceDlDciAssignment_Type | opt | in general DCCH/DTCH transmissions happen at the BWP currently being the active BWP at the SS and the UE specific search space is used for scheduling;<br>DCI configuration for Msg2 of the RACH procedure is done as part of the RACH procedure configuration (NR_RandomAccessResponseConfig_Type) |

**NR_DcchDtchConfigUL_Type**

| TTCN-3 Record Type | | | |
|---|---|---|---|
| **Name** | **NR_DcchDtchConfigUL_Type** | | |
| **Comment** | scheduling for DCCH/DTCH mapped to UL-SCH mapped to PUSCH | | |
| SearchSpaceAndDci | NR_SearchSpaceUlDciAssignment_Type | opt | in general DCCH/DTCH transmissions happen at the BWP currently being the active BWP at the SS and the UE specific search space is used for scheduling |
| PUCCH_Synch | NR_UplinkTimeAlignment_Synch_Type | opt | parameters for automatic control of timing advance |
| GrantConfig | UL_GrantConfig_Type | opt | configuration how UL grant allocation is done (as response to scheduling request, periodically, etc. |

**NR_DrxCtrl_Type**

| TTCN-3 Union Type | | |
|---|---|---|
| **Name** | **NR_DrxCtrl_Type** | |
| **Comment** | DRX configuration for connected mode (TS 38.321, clause 5.7) | |
| None | Null_Type | DRX not configured |
| Config | NR_ASN1_DRX_Config_Type | DRX is configured as signalled to the UE |

**NR_MeasGapCtrl_Type**

| TTCN-3 Union Type | | |
|---|---|---|
| **Name** | **NR_MeasGapCtrl_Type** | |
| **Comment** | support of measurement gap configuration | |
| None | Null_Type | no measurement gap configuration |
| Config | NR_ASN1_MeasGapConfig_Type | measurement gap configuration acc. to TS 38.331, clause 5.5.2.9;<br>NOTE: the release branch of MeasGapConfig in general is not used for configuration of the SS |

**NR_DcchDtchConfig_Type**

| TTCN-3 Record Type | | | |
|---|---|---|---|
| **Name** | **NR_DcchDtchConfig_Type** | | |
| **Comment** | | | |
| DL | NR_DcchDtchConfigDL_Type | opt | Scheduling, parameters related to DCCH and DTCH in DL |
| UL | NR_DcchDtchConfigUL_Type | opt | Scheduling, parameters related to DCCH and DTCH in UL |
| DrxCtrl | NR_DrxCtrl_Type | opt | DRX configuration as sent to the UE (or 'None' when the UE does not support connected mode DRX) |
| MeasGapCtrl | NR_MeasGapCtrl_Type | opt | to tell the SS when no assignments/grants shall be assigned to the UE |

## D.1.3.7 Cell_Group_Configuration

Configuration of cell group(s) in terms of dual connecivity and carrier aggregation

**Cell_Group_Configuration: Basic Type Definitions**

| TTCN-3 Basic Types | | |
|---|---|---|
| **NR_ServingCellIndex_Type** | integer | corresponds to ASN.1 (v15.1.0) definitions SCellIndex (1..31) and ServCellIndex (0..maxNrofServingCells-1):<br>According to ASN.1 "The value range is shared across the Cell Groups" and "the PCell of the Master Cell Group uses ID = 0" |

**NR_ServingCellConfig_Type**

| TTCN-3 Union Type | | |
|---|---|---|
| **Name** | **NR_ServingCellConfig_Type** | |
| **Comment** | serving cell capabilities of a cell | |
| SpCell | NR_SpCellConfig_Type | parameters specific for an SpCell and cell group configuration |
| SCell | NR_SCellConfig_Type | parameters specific for an SCell |
| None | Null_Type | the is no serving cell at all (e.g. neighbouring cell only) |

### NR_SCellConfig_Type

| TTCN-3 Record Type | | | |
|---|---|---|---|
| **Name** | **NR_SCellConfig_Type** | | |
| **Comment** | cell parameters specific for an SCell;<br>NOTE: the corresponding SpCell can be derived from the SpCell's SCellList;<br>further parameters may be added according to test requirements for CA test cases | | |
| ServingCellIndex | NR_ServingCellIndex_Type | opt | |
| TAG_Id | TAG_Id | opt | Id of the Timing Advance Group the SCell belongs to (according to TS 38.321 clause 6.1.3.4 the SpCell has the TAG Identity 0); the SS shall use the given TAG_Id e.g. for automatic time alignment in UL (see NR_UplinkTimeAlignment_AutoSynch_Type) |

### NR_SpCellConfig_Type

| TTCN-3 Record Type | | | |
|---|---|---|---|
| **Name** | **NR_SpCellConfig_Type** | | |
| **Comment** | cell parameters specific for an SpCell (PCell of the MCG or the PSCell of the SCG) and additionall parameters of the cell group;<br>further parameters may be added according to test requirements for CA test cases | | |
| ServingCellIndex | NR_ServingCellIndex_Type | opt | |
| CellGroupConfig | NR_SpCell_CellGroupConfig_Type | opt | parameters of the cell group of which the cell is SpCell (PCell or PSCell):<br>assigned to SpCell as in many test cases the cell group consists of the SpCell only and on the other hand every cell group has to have at least an SpCell |

### NR_SpCell_CellGroupConfig_Type

| TTCN-3 Record Type | | | |
|---|---|---|---|
| **Name** | **NR_SpCell_CellGroupConfig_Type** | | |
| **Comment** | Configuration of an NR cell group;<br>NOTE 1:<br>The type of cell group (MCG, SCG) may be derived from the CellGroupId (CellGroupId==0 => MCG, CellGroupId>0 => SCG)<br>NOTE 2:<br>Further cell group specific MAC and PHY parameters may be added corresponding to ASN.1 MAC-CellGroupConfig or may need to be added<br>(but e.g. the DRX configuration is assigned to NR_CcchDcchDtchConfig_Type already i.e. there is no need to configure it here) | | |
| CellGroupId | CellGroupId | opt | 0 for MCG (i.e. EUTRA in EN-DC), 1 for SCG (NR in EN-DC); see comments to ASN.1 definition of CellGroupId (v15.1.0) |
| SCellList | NR_CellIdList_Type | opt | list of SCells belonging to the SpCell's cell group; shall be initialised as empty list |
| MAC_CellGroupConfig | NR_ASN1_MAC_CellGroupConfig_Type | opt | Cell group specific MAC parameters as sent to the UE in CellGroupConfig.MAC-CellGroupConfig |
| PhysicalCellGroupConfig | NR_ASN1_PhysicalCellGroupConfig_Type | opt | Cell group specific physical layer parameters as sent to the UE in CellGroupConfig.PhysicalCellGroupConfig |

## D.1.4 Cell_Power_Attenuation

**NR_CellAttenuationConfig_Type**

| TTCN-3 Record Type | | | |
|---|---|---|---|
| **Name** | **NR_CellAttenuationConfig_Type** | | |
| **Comment** | | | |
| CellId | NR_CellId_Type | | |
| Attenuation | NR_Attenuation_Type | | |
| TimingInfo | TimingInfo_Type | opt | |

**NR_CellAttenuationList_Type**

| TTCN-3 Record of Type | |
|---|---|
| **Name** | **NR_CellAttenuationList_Type** |
| **Comment** | |
| record of NR_CellAttenuationConfig_Type | |

## D.1.5 Radio_Bearer_Configuration

Radio Bearer Configuration: SRBs/DRBs
NOTE: Type definitions for PDCP configuration are in NR_PDCP_TypeDefs

### NR_RlcBearerConfigInfo_Type

| TTCN-3 Record Type | | | |
|---|---|---|---|
| **Name** | **NR_RlcBearerConfigInfo_Type** | | |
| **Comment** | RLC bearer as defined in TS 37.340: RLC and MAC logical channel configuration of a radio bearer in one cell group | | |
| Rlc | NR_RLC_Configuration_Type | opt | mandatory for initial configuration; omit means "keep as it is" |
| LogicalChannelId | NR_LogicalChannelId_Type | opt | DRBs: DTCH-LogicalChannelIdentity as for rb-MappingInfo in DRB-ToAddModifyList;<br>SRBs: for SRBs specified configurations acc. to 38.331 clause 9.2.1 shall be applied:<br>SRB1: ul-LogicalChannel-Identity = dl-LogicalChannel-Identity = 1<br>SRB2: ul-LogicalChannel-Identity = dl-LogicalChannel-Identity = 2<br>SRB3: ul-LogicalChannel-Identity = dl-LogicalChannel-Identity = 3<br>for SRB0 being mapped to CCCH the SS shall apply<br>- LCID=0 for DL according to TS 38.321 Table 6.2.1-1<br>- LCID=0 or LCID=52 for UL according to TS 38.321 Table 6.2.1-2 depending on whether it is a CCCH1 or a CCCH message;<br>For DRBs and SRBs - except SRB0: mandatory for initial configuration; omit means "keep as it is"<br>For SRB0 LogicalChannelId is always omit and the SS shall apply the LCIDs according to TS 38.321 |
| Mac | NR_MAC_Configuration_Type | opt | |
| DiscardULData | boolean | opt | if omitted:<br>initial configuration: data is handed over to TTCN as usual<br>re-configuration: "keep as it is"<br>if set:<br>true - SS shall discard any data in UL for this radio bearer<br>false - (re)configuration back to normal mode<br>NOTE: typically applicable for UM DRBs only |

### NR_RlcBearerConfig_Type

| TTCN-3 Union Type | | |
|---|---|---|
| **Name** | **NR_RlcBearerConfig_Type** | |
| **Comment** | configuration of RLC bearer below NR-PDCP | |
| Config | NR_RlcBearerConfigInfo_Type | "normal" configuration: there is an RLC bearer configured for the cell which is linked to the PDCP being configured at the cell (the PDCP can be either 'RBTerminating' or 'Proxy') |
| None | Null_Type | No RLC bearer is configured at NR below the NR-PDCP: NR_PDCP_Configuration_Type shall be 'RBTerminating' with LinkToOtherCellGroup indicating cell with RLC bearer to be used |

### NR_RadioBearerConfigInfo_Type

| TTCN-3 Record Type | | | |
|---|---|---|---|
| **Name** | **NR_RadioBearerConfigInfo_Type** | | |
| **Comment** | | | |
| Sdap | SDAP_Configuration_Type | opt | omitted for EN-DC, otherwise mandatory for initial configuration; omit means "keep as it is"<br>for SRBs: Sdap.None:=true |
| Pdcp | NR_PDCP_Configuration_Type | opt | for SRB0: "Pdcp.None:=true"<br>mandatory for initial configuration; omit means "keep as it is" |
| RlcBearer | NR_RlcBearerConfig_Type | opt | mandatory for initial configuration; omit means "keep as it is" |

### NR_RadioBearerConfig_Type

| TTCN-3 Union Type | | |
|---|---|---|
| **Name** | **NR_RadioBearerConfig_Type** | |
| **Comment** | | |
| AddOrReconfigure | NR_RadioBearerConfigInfo_Type | add / re-configure RB |
| Release | Null_Type | release RB |

### NR_RadioBearer_Type

| TTCN-3 Record Type | | | |
|---|---|---|---|
| **Name** | **NR_RadioBearer_Type** | | |
| **Comment** | | | |
| Id | NR_RadioBearerId_Type | | either for SRB or DRB |
| Config | NR_RadioBearerConfig_Type | | |

### NR_RadioBearerList_Type

| TTCN-3 Record of Type | |
|---|---|
| **Name** | **NR_RadioBearerList_Type** |
| **Comment** | array of SRBs and/or DRBs.<br>TimingInfo: 'Now' in general;<br>activation time may be used in special case for release and/or reconfiguration of one or several RBs;<br>the following rules shall be considered:<br>- release/Reconfiguration of an RB shall not be scheduled earlier than 5ms after a previous data transmission on this RB<br>- subsequent release and reconfiguration(s) shall be scheduled with an interval of at least 5ms<br>- a subsequent data transmission on an RB shall not be scheduled earlier than 5ms after the last reconfiguration of the RB<br>the configuration shall be performed exactly at the given time<br>ControlInfo : FollowOnFlag:=false (unless explicitly specified otherwise in TS 38.523-3 clause 7) |
| record of NR_RadioBearer_Type | |

## D.1.5.1 RLC_Configuration

RLC configuration: radio bearer specific

## RLC_Configuration: Basic Type Definitions

| TTCN-3 Basic Types | | |
|---|---|---|
| **NR_SS_RLC_TM_Type** | Null_Type | TM to configure SRB0; no parameters to be defined |

## NR_RLC_ACK_Prohibit_Type

| TTCN-3 Enumerated Type | |
|---|---|
| **Name** | **NR_RLC_ACK_Prohibit_Type** |
| **Comment** | |
| Prohibit | cause SS RLC layer to stop any ACK transmission for UL PDUs received from UE |
| Continue | bring back the SS RLC in normal mode, where ACK/NACK are transmitted at polling |

## NR_RLC_NotACK_NextRLC_PDU_Type

| TTCN-3 Enumerated Type | |
|---|---|
| **Name** | **NR_RLC_NotACK_NextRLC_PDU_Type** |
| **Comment** | |
| Start | cause SS RLC layer not to ACK the next received RLC PDU;<br>this is done regardless of whether the poll bit is set or not;<br>Example [from UMTS]:<br>when the UE gets new security information in a SECURITY MODE COMMAND<br>the response (SECURITY MODE COMPLETE) sent by the UE is not acknowledged at the RLC level;<br>this causes the UE to continue using the "old" security information |

## NR_RLC_TransparentMode

| TTCN-3 Union Type | | |
|---|---|---|
| **Name** | **NR_RLC_TransparentMode** | |
| **Comment** | | |
| Umd | SN_FieldLengthUM | SN-FieldLengthUM ::= ENUMERATED {size6, size12} TS 38.331 |
| Amd | SN_FieldLengthAM | SN-FieldLengthAM ::= ENUMERATED {size12, size18} TS 38.331 |

## NR_RLC_TestModeInfo_Type

| TTCN-3 Union Type | | |
|---|---|---|
| **Name** | **NR_RLC_TestModeInfo_Type** | |
| **Comment** | | |
| AckProhibit | NR_RLC_ACK_Prohibit_Type | valid only when the RLC is configured in AM |
| NotACK_NextRLC_PDU | NR_RLC_NotACK_NextRLC_PDU_Type | valid only when the RLC is configured in AM |
| TransparentMode | NR_RLC_TransparentMode | |

## NR_RLC_TestModeConfig_Type

| TTCN-3 Union Type | | |
|---|---|---|
| **Name** | **NR_RLC_TestModeConfig_Type** | |
| **Comment** | | |
| None | Null_Type | |
| Info | NR_RLC_TestModeInfo_Type | |

**NR_SS_RLC_AM_Type**

| TTCN-3 Record Type | | | |
|---|---|---|---|
| **Name** | **NR_SS_RLC_AM_Type** | | |
| **Comment** | | | |
| Tx | NR_ASN1_UL_AM_RLC_Type | opt | the UE's UL setting to be used in SS's tx direction |
| Rx | NR_ASN1_DL_AM_RLC_Type | opt | the UE's DL setting to be used in SS's rx direction |

**NR_SS_RLC_UM_Type**

| TTCN-3 Record Type | | | |
|---|---|---|---|
| **Name** | **NR_SS_RLC_UM_Type** | | |
| **Comment** | | | |
| Tx | NR_ASN1_UL_UM_RLC_Type | opt | the UE's UL setting to be used in SS's tx direction |
| Rx | NR_ASN1_DL_UM_RLC_Type | opt | the UE's DL setting to be used in SS's rx direction |

**NR_RLC_RbConfig_Type**

| TTCN-3 Union Type | | |
|---|---|---|
| **Name** | **NR_RLC_RbConfig_Type** | |
| **Comment** | | |
| AM | NR_SS_RLC_AM_Type | |
| UM | NR_SS_RLC_UM_Type | |
| TM | NR_SS_RLC_TM_Type | normally SRB0 only; may be used for test purposes also |

**NR_RLC_Configuration_Type**

| TTCN-3 Record Type | | | |
|---|---|---|---|
| **Name** | **NR_RLC_Configuration_Type** | | |
| **Comment** | | | |
| Rb | NR_RLC_RbConfig_Type | opt | mandatory for initial configuration; omit means "keep as it is" |
| TestMode | NR_RLC_TestModeConfig_Type | opt | mandatory for initial configuration; omit means "keep as it is" |

## D.1.5.2 MAC_Configuration

MAC configuration: radio bearer specific configuration

**MAC_Configuration: Basic Type Definitions**

| TTCN-3 Basic Types | | |
|---|---|---|
| **NR_LogicalChannelId_Type** | UInt_Type | |

### NR_MAC_Test_DLLogChID_Type

| TTCN-3 Union Type | | |
|---|---|---|
| **Name** | **NR_MAC_Test_DLLogChID_Type** | |
| **Comment** | | |
| LogChId | NR_LogicalChannelId_Type | Specifies to over write the logical channel ID in MAC header in all the DL messages sent on the configured logical channel |
| ConfigLchId | Null_Type | Specifies that the normal mode of correct logical channel ID to be used in DL MAc header.<br>This will be the default mode, when SS is initially configured. |

### NR_MAC_Test_SCH_NoHeaderManipulation_Type

| TTCN-3 Enumerated Type | |
|---|---|
| **Name** | **NR_MAC_Test_SCH_NoHeaderManipulation_Type** |
| **Comment** | |
| NormalMode | MAC header is fully controlled by the SS |
| DL_SCH_Only | TTCN can submit a final MAC PDU including header and payloads;<br>SS does not do anything with this MAC PDU i.e. no header is added for the DL SCH transport channel.<br>It is possible that data belonging to multiple DRBs is sent in one MAC PDU and from one special RB configured.<br>NOTE: SRBs shall work as in normal mode and data can be sent/received on SRBs but sending on SRBs shall be in different TTIs than sending data PDUs. |
| DL_UL_SCH | In UL and DL the SS' MAC layer is transparent i.e. SS does not add or remove any MAC header |

### NR_MAC_TestModeInfo_Type

| TTCN-3 Record Type | | | |
|---|---|---|---|
| **Name** | **NR_MAC_TestModeInfo_Type** | | |
| **Comment** | Parameters/Configuration for MAC tests | | |
| DiffLogChId | NR_MAC_Test_DLLogChID_Type | | to be used in test cases 7.1.1.1 and 7.1.1.2 for using a different logical channel ID in MAC-header on DL-SCH channel |
| No_HeaderManipulation | NR_MAC_Test_SCH_NoHeaderManipulation_Type | | to configure mode for no header manipulation in SS MAC layer for DL/UL SCH |

### NR_MAC_TestModeConfig_Type

| TTCN-3 Union Type | | |
|---|---|---|
| **Name** | **NR_MAC_TestModeConfig_Type** | |
| **Comment** | | |
| None | Null_Type | |
| Info | NR_MAC_TestModeInfo_Type | |

### NR_MAC_LogicalChannelConfig_Type

| TTCN-3 Record Type | | | |
|---|---|---|---|
| **Name** | **NR_MAC_LogicalChannelConfig_Type** | | |
| **Comment** | | | |
| Priority | integer | | logical channel priority for the DL as described in TS 38.321, clause 5.4.3.1 for the UL |
| PrioritizedBitRate | NR_PrioritizedBitRate_Type | | PBR as described for the UL; probably not needed at SS |

**NR_MAC_Configuration_Type**

| TTCN-3 Record Type | | | |
|---|---|---|---|
| **Name** | **NR_MAC_Configuration_Type** | | |
| **Comment** | | | |
| LogicalChannel | NR_MAC_LogicalChannelConfig_Type | opt | mandatory for initial configuration; omit means "keep as it is" |
| TestMode | NR_MAC_TestModeConfig_Type | opt | mandatory for initial configuration; omit means "keep as it is";<br>for none MAC tests "TestMode.None:=true" |

## D.1.6 AS_Security

Primitive for control of AS security

**NR_PdcpSQN_Type**

| TTCN-3 Record Type | | | |
|---|---|---|---|
| **Name** | **NR_PdcpSQN_Type** | | |
| **Comment** | | | |
| Format | NR_PdcpCountFormat_Type | | 12 bit or 18 bit SQN |
| Value | integer | | SQN value (12 bit or 18 bit SQN)<br>NOTE:<br>in TTCN the test case writer is responsible to deal with potential overflows<br>(e.g. there shall be a "mod 32", "mod 128" or "mod 4096" according to the format) |

**NR_PDCP_ActTime_Type**

| TTCN-3 Union Type | | |
|---|---|---|
| **Name** | **NR_PDCP_ActTime_Type** | |
| **Comment** | The sequence number in UL and DL for SRB1 should be one more than the present SQN, as Ciphering starts in UL and DL soon after SMC and SMComp;<br>For other SRB/DRB it should be the present SQN. | |
| None | Null_Type | No Activation time; to be used if Ciphering is not applied |
| SQN | NR_PdcpSQN_Type | PDCP sequence number |

**NR_SecurityActTime_Type**

| TTCN-3 Record Type | | | |
|---|---|---|---|
| **Name** | **NR_SecurityActTime_Type** | | |
| **Comment** | | | |
| RadioBearerId | NR_RadioBearerId_Type | | |
| UL | NR_PDCP_ActTime_Type | | |
| DL | NR_PDCP_ActTime_Type | | |

**NR_SecurityActTimeList_Type**

| TTCN-3 Record of Type | |
|---|---|
| **Name** | **NR_SecurityActTimeList_Type** |
| **Comment** | |
| record of NR_SecurityActTime_Type | |

### NR_AS_IntegrityInfo_Type

| TTCN-3 Record Type | | | |
|---|---|---|---|
| **Name** | **NR_AS_IntegrityInfo_Type** | | |
| **Comment** | for initial configuration activation time is not needed for integrity protection as all messages in DL after security activation are integrity protected;<br>this means this ASP is invoked before transmission of Security mode command;<br>if there is a integrity violation in UL SS shall set the IndicationStatus in the common ASP part to flag the integrity error<br>(IndicationStatus.Error.Integrity.Pdcp := true);<br>integrity to be provided for each SRB as per core spec | | |
| Algorithm | IntegrityProtAlgorithm | | IntegrityProtAlgorithm being defined in RRC ASN.1 |
| KRRCint | B128_Key_Type | | |
| KUPint | B128_Key_Type | opt | Not used when UE connected to EPS (i.e. set to omit for EPS) |
| ActTimeList | NR_SecurityActTimeList_Type | opt | omit for initial configuration (i.e. all SRBs to be integrity protected immediately);<br>in HO scenarios activation time may be needed e.g. for SRB1 |

### NR_AS_CipheringInfo_Type

| TTCN-3 Record Type | | | |
|---|---|---|---|
| **Name** | **NR_AS_CipheringInfo_Type** | | |
| **Comment** | | | |
| Algorithm | CipheringAlgorithm | | CipheringAlgorithm_Type being defined in RRC ASN.1 |
| KRRCenc | B128_Key_Type | | |
| KUPenc | B128_Key_Type | | KUPenc is mandatory; and SS uses it when DRB are configured |
| ActTimeList | NR_SecurityActTimeList_Type | | |

### NR_AS_SecStartRestart_Type

| TTCN-3 Record Type | | | |
|---|---|---|---|
| **Name** | **NR_AS_SecStartRestart_Type** | | |
| **Comment** | | | |
| Integrity | NR_AS_IntegrityInfo_Type | opt | optional to allow separated activation of integrity and ciphering; omit: keep as it is |
| Ciphering | NR_AS_CipheringInfo_Type | opt | optional to allow separated activation of integrity and ciphering; omit: keep as it is |

### NR_AS_Security_Type

| TTCN-3 Union Type | | |
|---|---|---|
| **Name** | **NR_AS_Security_Type** | |
| **Comment** | Security mode command procedure (TS 38.331, clause 5.3.4) | |
| StartRestart | NR_AS_SecStartRestart_Type | information to start/restart AS security protection in the PDCP<br>TimingInfo : 'Now' (in general)<br>NOTE: "activation time" may be specified in the primitive based on PDCP SQN |
| Release | Null_Type | to release AS security protection in the PDCP<br>(if any; if there is no AS security the SS does not need to do anything)<br>TimingInfo : 'Now' (in general)<br>NOTE: "activation time" may be specified in the primitive based on PDCP SQN |

## D.1.7 Paging_Trigger

### NR_SlotOffsetList_Type

| TTCN-3 Record of Type | |
|---|---|
| **Name** | **NR_SlotOffsetList_Type** |
| **Comment** | |
| record length (1..infinity) of integer | |

### NR_PagingTrigger_Type

| TTCN-3 Record Type | | | |
|---|---|---|---|
| **Name** | **NR_PagingTrigger_Type** | | |
| **Comment** | to trigger transmission of a paging message on the PCCH at a calculated paging occasion (TS 38.304, clause 7);<br>the paging occasion is calculated by TTCN and activation time is applied<br>TimingInfo : Calculated paging occasion | | |
| Paging | PCCH_Message | | paging to be send out at paging occasion and being announced on PDCCH using P-RNTI<br>SS shall add the necessary padding bits as specified in TS 38.331, clause 8.5 |
| SlotOffsetList | NR_SlotOffsetList_Type | opt | list of slot offsets relative to the absolute timing information given in the common part of the ASP;<br>if present, multiple pagings are sent out at all occasions given by the list;<br>if omitted only a single paging is sent at the occasion given by the timing information in the common part of the ASP |

## D.1.8 Delta_Value_Trigger

### NR_Band_SsbForDelta_Type

| TTCN-3 Record Type | | | |
|---|---|---|---|
| **Name** | **NR_Band_SsbForDelta_Type** | | |
| **Comment** | Primary and secondary bands for requesting Delta values<br>CellId: nr_Cell_NonSpecific<br>TimingInfo : 'Now' | | |
| DeltaPrimary | Band_SsbInfo_Type | | |
| DeltaSecondary | Band_SsbInfo_Type | | |

### Band_SsbInfo_Type

| TTCN-3 Record Type | | | |
|---|---|---|---|
| **Name** | **Band_SsbInfo_Type** | | |
| **Comment** | Band and SSB Frequency value for which Delta values are requested | | |
| DeltaBand | FreqBandIndicatorNR | | |
| Ssb_NRf1 | NR_ASN1_ARFCN_ValueNR_Type | opt | |
| Ssb_NRf2 | NR_ASN1_ARFCN_ValueNR_Type | opt | |
| Ssb_NRf3 | NR_ASN1_ARFCN_ValueNR_Type | opt | |
| Ssb_NRf4 | NR_ASN1_ARFCN_ValueNR_Type | opt | |

## D.1.9 System_Indication_Control

Primitive for control of system indications for special purposes

**NR_System_IndicationControl_Type**

| TTCN-3 Record Type | | | |
|---|---|---|---|
| **Name** | **NR_System_IndicationControl_Type** | | |
| **Comment** | Initially all indications apart from "Error" are disabled in SS<br>(i.e. it shall not be necessary in 'normal' test cases to use this primitive but only if a specific indication is needed);<br>omit means indication mode is not changed.<br>TimingInfo : 'Now' (in general) | | |
| RLC_Discard | IndicationAndControlMode_Type | opt | To enable/disable reporting of discarded RLC PDUs |
| MAC_BSR | IndicationAndControlMode_Type | opt | To enable/disable reporting of short/long BSR |
| MAC_PHR | IndicationAndControlMode_Type | opt | To enable/disable reporting of short/long PHR |
| RachPreamble | IndicationAndControlMode_Type | opt | To enable/disable reporting of PRACH preamble |
| SchedReq | IndicationAndControlMode_Type | opt | To enable/disable reporting of Scheduling Request |
| UL_HARQ | IndicationAndControlMode_Type | opt | To enable/disable reporting of reception of HARQ ACK/NACK |
| HarqError | IndicationAndControlMode_Type | opt | To enable/disable reporting of HARQ errors |

## D.1.10 PDCP_Count

Primitives to enquire PDCP COUNT

**NR_PdcpCountFormat_Type**

| TTCN-3 Enumerated Type | |
|---|---|
| **Name** | **NR_PdcpCountFormat_Type** |
| **Comment** | |
| PdcpCount_Srb | 20 bit HFN; 12 bit SQN |
| PdcpCount_DrbSQN12 | 20 bit HFN; 12 bit SQN |
| PdcpCount_DrbSQN18 | 14 bit HFN; 18 bit SQN |

**NR_PdcpCount_Type**

| TTCN-3 Record Type | | | |
|---|---|---|---|
| **Name** | **NR_PdcpCount_Type** | | |
| **Comment** | | | |
| Format | NR_PdcpCountFormat_Type | | |
| Value | PdcpCountValue_Type | | |

### NR_PdcpCountInfo_Type

| TTCN-3 Record Type | | | |
|---|---|---|---|
| **Name** | **NR_PdcpCountInfo_Type** | | |
| **Comment** | | | |
| RadioBearerId | NR_RadioBearerId_Type | | |
| UL | NR_PdcpCount_Type | opt | omit: keep as it is |
| DL | NR_PdcpCount_Type | opt | omit: keep as it is |

### NR_PdcpCountInfoList_Type

| TTCN-3 Record of Type | |
|---|---|
| **Name** | **NR_PdcpCountInfoList_Type** |
| **Comment** | |
| record of NR_PdcpCountInfo_Type | |

### NR_PdcpCountGetReq_Type

| TTCN-3 Union Type | | |
|---|---|---|
| **Name** | **NR_PdcpCountGetReq_Type** | |
| **Comment** | | |
| AllRBs | Null_Type | return COUNT values for all RBs being configured on this PTC<br>NOTE: in case of multi-RAT dual connectivity RBs may be configured by different PTCs |
| SingleRB | NR_RadioBearerId_Type | |

### NR_PDCP_CountReq_Type

| TTCN-3 Union Type | | |
|---|---|---|
| **Name** | **NR_PDCP_CountReq_Type** | |
| **Comment** | | |
| Get | NR_PdcpCountGetReq_Type | Request PDCP count for one or all RBs being configured at the PDCP<br>TimingInfo: 'Now' |
| Set | NR_PdcpCountInfoList_Type | Set PDCP count for one or all RBs being configured at the PDCP;<br>list for RBs which's COUNT shall be manipulated<br>TimingInfo: 'Now' (in general)<br>activation time may be used in case of CA inter cell handover to set the PdcpCount |

### NR_PDCP_CountCnf_Type

| TTCN-3 Union Type | | |
|---|---|---|
| **Name** | **NR_PDCP_CountCnf_Type** | |
| **Comment** | | |
| Get | NR_PdcpCountInfoList_Type | RBs in ascending order; SRBs first |
| Set | Null_Type | |

## D.1.11 PDCP_Handover

Primitives to control PDCP regarding handover

### NR_PDCP_HandoverInit_Type

| TTCN-3 Record Type | | | |
|---|---|---|---|
| **Name** | **NR_PDCP_HandoverInit_Type** | | |
| **Comment** | | | |
| SourceCellId | NR_CellId_Type | | |

### NR_PDCP_HandoverControlReq_Type

| TTCN-3 Union Type | | |
|---|---|---|
| **Name** | **NR_PDCP_HandoverControlReq_Type** | |
| **Comment** | | |
| HandoverInit | NR_PDCP_HandoverInit_Type | to inform SS that a handover (or PSCell change) will follow, for SS handling of PDCP context from the source cell to the target cell.<br>CellId : In the common ASP part the CellId shall be set to the id of the target cell<br>TimingInfo : 'Now' |
| HandoverComplete | Null_Type | to inform SS that the handover (or PSCell change) has successfully been performed by the UE;<br>this shall trigger the SS to send a PDCP Status Report on AM DRB(s) to the UE;<br>CellId : the CellId shall be set to the id of the target cell<br>TimingInfo : 'Now' |

## D.1.12 L1_Test_Mode

Primitive for control of L1 Test Modes

### NR_L1_TestMode_Type

| TTCN-3 Record Type | | | |
|---|---|---|---|
| **Name** | **NR_L1_TestMode_Type** | | |
| **Comment** | TimingInfo : depends on the test mode; activation time is used e.g. for manipulation of the CRC | | |
| DL_SCH_CRC | NR_DL_SCH_CRC_Type | | Manipulation of CRC bit generation for DL-SCH |

### NR_MAC_Test_DL_SCH_CRC_Mode_Type

| TTCN-3 Enumerated Type | |
|---|---|
| **Name** | **NR_MAC_Test_DL_SCH_CRC_Mode_Type** |
| **Comment** | |
| Normal | default mode, the CRC generation is correct |
| Erroneous | SS shall generate CRC error by toggling CRC bits;<br>the CRC error shall be applied for all PDUs of the given RNTI and their retransmission until SS is configured back to 'normal' operation |
| Error1AndNormal | the SS generates wrong CRC for first transmission and correct CRC on first retransmission. Later SS operates in normal mode. The retransmission is automatically triggered by reception of HARQ NACK |

**NR_DL_SCH_CRC_Type**

| TTCN-3 Union Type | | |
|---|---|---|
| **Name** | **NR_DL_SCH_CRC_Type** | |
| **Comment** | NOTE:<br>CRC error mode for RA_RNTI is not addressed as it will be configured in RACHProcedureConfig | |
| C_RNTI | NR_MAC_Test_DL_SCH_CRC_Mode_Type | to configure mode for CRC bit for all MAC PDUs for which C-RNTI is used in PDCCH transmission |
| SI_RNTI | NR_MAC_Test_DL_SCH_CRC_Mode_Type | to configure mode for CRC bit for all MAC PDUs for which SI-RNTI is used in PDCCH transmission |
| SPS_RNTI | NR_MAC_Test_DL_SCH_CRC_Mode_Type | to configure mode for CRC bit for all MAC PDUs for which SPS-RNTI is used in PDCCH transmission |

## D.1.13 DCI_Trigger

Primitive to trigger SS to send specific DCI (e.g. PDCCH order) which is not associated with any PDSCH or PUSCH transmission

**NR_DCI_Trigger_Type**

| TTCN-3 Record Type | | | |
|---|---|---|---|
| **Name** | **NR_DCI_Trigger_Type** | | |
| **Comment** | TimingInfo : 'Now' or specific activation time | | |
| AssignedBWPs | NR_AssignedBWPs_Type | | BWP which shall be used to schedule the DCI |
| SearchSpaceType | NR_SearchSpaceType_Type | | search space to be used for sending of given DCI;<br>the SS may raise an error when there is no such search space at the scheduled point in time |
| DciFormat | NR_DCI_TriggerFormat_Type | | |

**NR_DCI_TriggerFormat_Type**

| TTCN-3 Union Type | | |
|---|---|---|
| **Name** | **NR_DCI_TriggerFormat_Type** | |
| **Comment** | | |
| PdcchOrder | NR_PDCCH_Order_Type | |
| ShortMessage | NR_DciWithShortMessageOnly_Type | |
| DciFormat_2_0 | NR_DciFormat_2_0_Type | |
| DciFormat_2_1 | NR_DciFormat_2_1_Type | |
| DciFormat_2_2 | NR_DciFormat_2_2_Type | |
| DciFormat_2_3 | NR_DciFormat_2_3_Type | |

### NR_DciWithShortMessageOnly_Type

| TTCN-3 Record Type | | | |
|---|---|---|---|
| **Name** | **NR_DciWithShortMessageOnly_Type** | | |
| **Comment** | "stand-alone" DCI with CRC scrambled by P-RNTI with no PCCH-Message being associated;<br>=> all fields apart from the ones listed in this record are reserved<br>(see TS 38.212 clause 7.3.1.2.1) | | |
| ShortMessageIndicator | B2_Type | | Short Message Indicator according to TS 38.212 Table 7.3.1.2.1-1;<br>to be set to '10'B indicating that only short message is present in the DCI |
| ShortMessages | B8_Type | | Short Messages according to TS 38.331 Table 6.5-1 |
| SlotOffsetList | NR_SlotOffsetList_Type | opt | list of slot offsets relative to the absolute timing information given in the common part of the ASP;<br>if present, multiple short messages are sent out at all occasions given by the list;<br>if omitted only a single short message is sent at the occasion given by the timing information in the common part of the ASP |

### NR_PDCCH_Order_Type

| TTCN-3 Record Type | | | |
|---|---|---|---|
| **Name** | **NR_PDCCH_Order_Type** | | |
| **Comment** | PDCCH order accordingt to TS 38.212 clause 7.3.1.2.1 to initiate RA procedure (TS 38.321, clause 5.1.1):<br>DCI format 1_0 with CRC scrambled by C-RNTI and the "Frequency domain resource assignment" field are of all ones | | |
| RA_PreambleIndex | B6_Type | | ra-PreambleIndex according to TS 38.321 clause 5.1.2 |
| UL_SUL_Indicator | NR_DciCommon_UL_SUL_Indicator_Type | | indicates which UL carrier in the cell to transmit the PRACH if the UE is configured with SUL in the cell and RA_PreambleIndex != '000000'B;<br>"None" otherwise |
| SSB_Index | B6_Type | | indicates the SS/PBCH that shall be used to determine the RACH occasion for the PRACH transmission if RA_PreambleIndex != '000000'B;<br>'000000'B (reserved) otherwise |
| PrachMaskIndex | B4_Type | | indicates the RACH occasion associated with the SS/PBCH indicated by "SS/PBCH index" for the PRACH transmission, according to TS 38.321 clause 5.1.1;<br>'0000'B (reserved) otherwise |

### NR_DciFormat_2_0_SfiList_Type

| TTCN-3 Record of Type | |
|---|---|
| **Name** | **NR_DciFormat_2_0_SfiList_Type** |
| **Comment** | list of SFI-indexes as used as slotFormatCombinationId in SlotFormatCombination (see TS 38.331):<br>Each index addresses the SlotFormatCombination for a serving cell in SlotFormatCombinationsPerCell (the position is given by 'positionInDCI');<br>the size of each SFI-index depends on the maximum value of slotFormatCombinationIds (maxSFIindex) in the sequence of SlotFormatCombinations:<br>SFI-index-length = MAX(CEIL(log2(maxSFIindex+1)), 1); see TS 38.213 clause 11.1.1;<br>!!!! NR OPEN ISSUE: it is not fully clear whether the maximum slotFormatCombinationId is determined per Cell or over all cells !!!!<br>!!!! ASSUMPTION: it is per cell and therefore different SFI-indexes may use bitstrings of different length !!!! |
| record of bitstring | |

### NR_DciFormat_2_0_Type

| TTCN-3 Record Type | | | |
|---|---|---|---|
| **Name** | **NR_DciFormat_2_0_Type** | | |
| **Comment** | TS 38.212 clause 7.3.1.3.1: for notifying the slot format;<br>default parameters according to TS 38.508-1 clause 4.3.6.1.3.1 | | |
| SfiList | NR_DciFormat_2_0_SfiList_Type | | |

### NR_DciFormat_2_1_IntValueList_Type

| TTCN-3 Record of Type | |
|---|---|
| **Name** | **NR_DciFormat_2_1_IntValueList_Type** |
| **Comment** | list of 14 bit INT values per serving cell (see DownlinkPreemption, INT-ConfigurationPerServingCell in TS 38.331 and TS 38.213 clause 11.2) |
| record length (1..9) of B14_Type | |

### NR_DciFormat_2_1_Type

| TTCN-3 Record Type | | | |
|---|---|---|---|
| **Name** | **NR_DciFormat_2_1_Type** | | |
| **Comment** | TS 38.212 clause 7.3.1.3.2: notifying the PRB(s) and OFDM symbol(s) where UE may assume no transmission is intended for the UE;<br>default parameters according to TS 38.508-1 clause 4.3.6.1.3.2 | | |
| IntValueList | NR_DciFormat_2_1_IntValueList_Type | | |

### NR_DciFormat_2_2_ClosedLoopIndicator_Type

| TTCN-3 Record Type | | | |
|---|---|---|---|
| **Name** | **NR_DciFormat_2_2_ClosedLoopIndicator_Type** | | |
| **Comment** | TS 38.212 clause 7.3.1.3.3: Closed loop indicator | | |
| None | Null_Type | | 0 bit if the UE is not configured with higher layer parameter twoPUSCH-PC-AdjustmentStates |
| Index | B1_Type | | 1 bit otherwise |

### NR_DciFormat_2_2_TpcBlock_Type

| TTCN-3 Union Type | | |
|---|---|---|
| **Name** | **NR_DciFormat_2_2_TpcBlock_Type** | |
| **Comment** | TS 38.212 clause 7.3.1.3.3: single TPC block | |
| ClosedLoopIndicator | NR_DciFormat_2_2_ClosedLoopIndicator_Type | |
| TpcCommand | NR_DciCommon_TpcCommand_Type | |

### NR_DciFormat_2_2_TpcBlockList_Type

| TTCN-3 Record of Type | |
|---|---|
| **Name** | **NR_DciFormat_2_2_TpcBlockList_Type** |
| **Comment** | list of TPC blocks according to TS 38.212 clause 7.3.1.3.3;<br>beginning of each block is configured at the UE by tpc-IndexPCell or tpc-IndexPUCCH-SCell for PUCCH and by tpc-Index or tpc-IndexSUL for PUCCH<br>(see PUCCH-TPC-CommandConfig and PUSCH-TPC-CommandConfig in TS 38.331 and TS 38.213 clause 11.3) |
| record of NR_DciFormat_2_2_TpcBlock_Type | |

### NR_DciFormat_2_2_Type

| TTCN-3 Record Type | | | |
|---|---|---|---|
| **Name** | **NR_DciFormat_2_2_Type** | | |
| **Comment** | TS 38.212 clause 7.3.1.3.3: for the transmission of TPC commands for PUCCH and PUSCH; default parameters according to TS 38.508-1 clause 4.3.6.1.3.3 | | |
| TpcBlockList | NR_DciFormat_2_2_TpcBlockList_Type | | |

### NR_DciFormat_2_3_SrsRequest_Type

| TTCN-3 Record Type | | | |
|---|---|---|---|
| **Name** | **NR_DciFormat_2_3_SrsRequest_Type** | | |
| **Comment** | TS 38.212 clause 7.3.1.3.4: according to TS 38.213 clause 11.4 the presence of SRS request(s) depends on fieldTypeFormat2-3 (see SRS-TPC-CommandConfig in TS 38.331) | | |
| None | Null_Type | | 0 bit: no SRS request |
| SrsRequestValue | B2_Type | | 2 bits: Index of the SRS resource set to be used according to TS 38.212 Table 7.3.1.1.2-24 |

### NR_DciCommon_TpcCommandList_Type

| TTCN-3 Record of Type | |
|---|---|
| **Name** | **NR_DciCommon_TpcCommandList_Type** |
| **Comment** | |
| record of NR_DciCommon_TpcCommand_Type | |

### NR_DciFormat_2_3_TypeA_Type

| TTCN-3 Record Type | | | |
|---|---|---|---|
| **Name** | **NR_DciFormat_2_3_TypeA_Type** | | |
| **Comment** | TS 38.212 clause 7.3.1.3.4: srs-TPC-PDCCH-Group = typeA (see SRS-CarrierSwitching in TS 38.331) | | |
| SrsRequest | NR_DciFormat_2_3_SrsRequest_Type | | |
| TpcCommandList | NR_DciCommon_TpcCommandList_Type | | |

### NR_DciFormat_2_3_SingleBlockTypeB_Type

| TTCN-3 Record Type | | | |
|---|---|---|---|
| **Name** | **NR_DciFormat_2_3_SingleBlockTypeB_Type** | | |
| **Comment** | TS 38.212 clause 7.3.1.3.4: srs-TPC-PDCCH-Group = typeB (see SRS-CarrierSwitching in TS 38.331) | | |
| SrsRequest | NR_DciFormat_2_3_SrsRequest_Type | | |
| TpcCommand | NR_DciCommon_TpcCommand_Type | | |

### NR_DciFormat_2_3_TypeB_Type

| TTCN-3 Record of Type | |
|---|---|
| **Name** | **NR_DciFormat_2_3_TypeB_Type** |
| **Comment** | |
| record of NR_DciFormat_2_3_SingleBlockTypeB_Type | |

### NR_DciFormat_2_3_TypeA_B_Type

| TTCN-3 Union Type | | |
|---|---|---|
| **Name** | **NR_DciFormat_2_3_TypeA_B_Type** | |
| **Comment** | | |
| TypeA | NR_DciFormat_2_3_TypeA_Type | Type-A as indicated in srs-TPC-PDCCH-Group (see SRS-CarrierSwitching in TS 38.331) |
| TypeB | NR_DciFormat_2_3_TypeB_Type | Type-B as indicated in srs-TPC-PDCCH-Group (see SRS-CarrierSwitching in TS 38.331) |

### NR_DciFormat_2_3_Type

| TTCN-3 Record Type | | | |
|---|---|---|---|
| **Name** | **NR_DciFormat_2_3_Type** | | |
| **Comment** | TS 38.212 clause 7.3.1.3.4: for the transmission of a group of TPC commands for SRS transmissions by one or more UEs;<br>default parameters according to TS 38.508-1 clause 4.3.6.1.3.4 | | |
| TypeA_B | NR_DciFormat_2_3_TypeA_B_Type | | |

## D.1.14 System_Indications

Primitives for System indications

### NR_HarqProcessInfo_Type

| TTCN-3 Record Type | | | |
|---|---|---|---|
| **Name** | **NR_HarqProcessInfo_Type** | | |
| **Comment** | | | |
| Id | NR_HarqProcessId_Type | | |

### NR_HarqError_Type

| TTCN-3 Union Type | | |
|---|---|---|
| **Name** | **NR_HarqError_Type** | |
| **Comment** | | |
| UL | NR_HarqProcessInfo_Type | indicates HARQ error detected at the SS side (error at UL transmission) |
| DL | NR_HarqProcessInfo_Type | indicates HARQ NACK sent by the UE (error at DL transmission) |

### NR_RachPreamble_Type

| TTCN-3 Record Type | | | |
|---|---|---|---|
| **Name** | **NR_RachPreamble_Type** | | |
| **Comment** | | | |
| RAPID | integer | | indicates the RAPID of the preamble (integer (0..63)) |

### NR_RlcDiscardInd_Type

| TTCN-3 Record Type | | | |
|---|---|---|---|
| **Name** | **NR_RlcDiscardInd_Type** | | |
| **Comment** | SS shall send this indication if it discards a received RLC AMD PDU as specified in TS 38.322 cl. 5.2.3.2.2 | | |
| SequenceNumber | integer | | sequence number of the PDU being discarded |

## D.1.15 System_Interface

### NR_SYSTEM_CTRL_REQ

| TTCN-3 Record Type | | | |
|---|---|---|---|
| **Name** | **NR_SYSTEM_CTRL_REQ** | | |
| **Comment** | | | |
| Common | NR_ReqAspCommonPart_Type | | Unless specified otherwise for a particular primitive, the following applies:<br>CellId: identifier of the cell<br>RoutingInfo : 'None'<br>RlcBearerRouting : 'None'<br>TimingInfo : 'Now' or specific activation time, depends on respective primitive<br>ControlInfo :<br>CnfFlag: depends on TimingInfo; in general 'false' when specific activation time is used, 'true' for 'Now'<br>FollowOnFlag 'false' |
| Request | NR_SystemRequest_Type | | |

### NR_SYSTEM_CTRL_CNF

| TTCN-3 Record Type | | | |
|---|---|---|---|
| **Name** | **NR_SYSTEM_CTRL_CNF** | | |
| **Comment** | | | |
| Common | NR_CnfAspCommonPart_Type | | TimingInfo is ignored by TTCN (apart from EnquireTiming)<br>=> SS may set TimingInfo to "None" |
| Confirm | NR_SystemConfirm_Type | | |

### NR_SYSTEM_IND

| TTCN-3 Record Type | | | |
|---|---|---|---|
| **Name** | **NR_SYSTEM_IND** | | |
| **Comment** | | | |
| Common | NR_IndAspCommonPart_Type | | CellId : identifier of the cell<br>RoutingInfo : 'none'<br>RlcBearerRouting : 'none'<br>TimingInfo : The SS shall provide TimingInfo depending on the respective indication (see below) |
| Indication | NR_SystemIndication_Type | | - Error<br>TimingInfo: related to the error (if available)<br>- RlcDiscardInd<br>TimingInfo: slot in which the RLC PDU has been received<br>- MAC<br>TimingInfo: slot in which the MAC PDU has been received containing the MAC CE being indicated<br>- RachPreamble<br>TimingInfo: start of the RACH preamble<br>- SchedReq<br>TimingInfo: slot containing the SR<br>- UL_HARQ<br>TimingInfo: slot containing the UL HARQ<br>- HarqError<br>TimingInfo: slot containing the UL HARQ |

### NR_SYSTEM_PORT

| TTCN-3 Port Type | | |
|---|---|---|
| **Name** | **NR_SYSTEM_PORT** | |
| **Comment** | NR PTC: Port for system configuration | |
| out | NR_SYSTEM_CTRL_REQ | |
| in | NR_SYSTEM_CTRL_CNF | |

### NR_SYSIND_PORT

| TTCN-3 Port Type | | |
|---|---|---|
| **Name** | **NR_SYSIND_PORT** | |
| **Comment** | NR PTC: Port for system indications | |
| in | NR_SYSTEM_IND | |

## D.2 NR_ASP_DrbDefs

ASP interface for DRBs

# D.2.1 PDU_TypeDefs

## D.2.1.1 MAC_PDU

**NR_MAC_PDU_DL_Type**

| TTCN-3 Record Type | | | |
|---|---|---|---|
| **Name** | **NR_MAC_PDU_DL_Type** | | |
| **Comment** | | | |
| CE_SubPDUList | NR_MAC_CE_SubPDU_DL_List_Type | opt | list of subPDUs with MAC CE |
| SDU_SubPDUList | NR_MAC_SDU_SubPDU_List_Type | opt | list of subPDUs with MAC SDU |
| Padding_SubPDU | NR_MAC_Padding_SubPDU_Type | opt | subPDU with padding |

**NR_MAC_PDU_UL_Type**

| TTCN-3 Record Type | | | |
|---|---|---|---|
| **Name** | **NR_MAC_PDU_UL_Type** | | |
| **Comment** | | | |
| SDU_SubPDUList | NR_MAC_SDU_SubPDU_List_Type | opt | list of subPDUs with MAC SDU |
| CE_SubPDUList | NR_MAC_CE_SubPDU_UL_List_Type | opt | list of subPDUs with MAC CE |
| Padding_SubPDU | NR_MAC_Padding_SubPDU_Type | opt | subPDU with padding |

**NR_MAC_PDU_Type**

| TTCN-3 Union Type | | |
|---|---|---|
| **Name** | **NR_MAC_PDU_Type** | |
| **Comment** | | |
| DL | NR_MAC_PDU_DL_Type | |
| UL | NR_MAC_PDU_UL_Type | |

**NR_MAC_PDUList_Type**

| TTCN-3 Record of Type | |
|---|---|
| **Name** | **NR_MAC_PDUList_Type** |
| **Comment** | |
| record of NR_MAC_PDU_Type | |

### D.2.1.1.1 MAC_PDU_SubPDU

MAC subPDU (TS 38.321 clause 6.1.2)

**MAC_PDU_SubPDU: Basic Type Definitions**

| TTCN-3 Basic Types | | |
|---|---|---|
| **B8_16_Type** | bitstring length(8..16) | NOTE: length restriction can only be a range but not two distinct lengths |
| **NR_MAC_SDU_Type** | octetstring | |

### NR_MAC_PDU_SubHeader_Type

| TTCN-3 Record Type | | | |
|---|---|---|---|
| **Name** | **NR_MAC_PDU_SubHeader_Type** | | |
| **Comment** | MAC PDU SubHeader (TS 38.321 clause 6.1.2) | | |
| Reserved | B1_Type | | Reserved bit |
| Format | B1_Type | | F:<br>The Format field indicates the size of the Length field according to TS 38.321 clause 6.2.1: value 0 => 8 bits, value 1 => 16 bits. In case of MAC subheader for fixed sized MAC CE or padding (R/LCID MAC subheader) this field is reserved (i.e. treated as another R field) |
| LCID | B6_Type | | LCID:<br>Logical Channel ID field according to TS 38.321 Tables 6.2.1-1 and 6.2.1-2 |
| ELCID | B8_16_Type | opt | eLCID:<br>The extended Logical Channel ID field according to TS 38.321 Tables 6.2.1-1a, 6.2.1-1b, 6.2.1-2a and 6.2.1-2b for the DL-SCH and UL-SCH respectively.<br>The size of the eLCID field is either 8 bits or 16 bits. |
| Length | B8_16_Type | opt | Either omit (fixed-sized MAC CE) or 8 bits (F=0) or 16 bits (F=1) |

### NR_MAC_CE_SubPDU_DL_Type

| TTCN-3 Record Type | | | |
|---|---|---|---|
| **Name** | **NR_MAC_CE_SubPDU_DL_Type** | | |
| **Comment** | MAC DL subPPU with MAC subheader only (in case of MAC CE with fixed size of zero bits) or MAC subheader + MAC CE | | |
| SubHeader | NR_MAC_PDU_SubHeader_Type | | |
| ControlElement | NR_MAC_ControlElementDL_Type | opt | omit if MAC CE has fixed size of zero bits |

### NR_MAC_CE_SubPDU_DL_List_Type

| TTCN-3 Set of Type | |
|---|---|
| **Name** | **NR_MAC_CE_SubPDU_DL_List_Type** |
| **Comment** | |
| set of NR_MAC_CE_SubPDU_DL_Type | |

### NR_MAC_CE_SubPDU_UL_Type

| TTCN-3 Record Type | | | |
|---|---|---|---|
| **Name** | **NR_MAC_CE_SubPDU_UL_Type** | | |
| **Comment** | MAC UL subPPU with MAC subheader only (in case of MAC CE with fixed size of zero bits) or MAC subheader + MAC CE | | |
| SubHeader | NR_MAC_PDU_SubHeader_Type | | |
| ControlElement | NR_MAC_ControlElementUL_Type | opt | omit if MAC CE has fixed size of zero bits |

**NR_MAC_CE_SubPDU_UL_List_Type**

| TTCN-3 Set of Type | |
|---|---|
| **Name** | **NR_MAC_CE_SubPDU_UL_List_Type** |
| **Comment** | |
| set of NR_MAC_CE_SubPDU_UL_Type | |

**NR_MAC_SDU_SubPDU_Type**

| TTCN-3 Record Type | | | |
|---|---|---|---|
| **Name** | **NR_MAC_SDU_SubPDU_Type** | | |
| **Comment** | MAC subPPU with MAC subheader + MAC SDU | | |
| SubHeader | NR_MAC_PDU_SubHeader_Type | | |
| SDU | NR_MAC_SDU_Type | | |

**NR_MAC_SDU_SubPDU_List_Type**

| TTCN-3 Set of Type | |
|---|---|
| **Name** | **NR_MAC_SDU_SubPDU_List_Type** |
| **Comment** | |
| set of NR_MAC_SDU_SubPDU_Type | |

**NR_MAC_Padding_SubPDU_Type**

| TTCN-3 Record Type | | | |
|---|---|---|---|
| **Name** | **NR_MAC_Padding_SubPDU_Type** | | |
| **Comment** | MAC subPPU with MAC subheader + Padding | | |
| SubHeader | NR_MAC_PDU_SubHeader_Type | | |
| Padding | octetstring | | 0 or more octets padding |

### D.2.1.1.2 MAC_ControlElements

MAC Control Elements (CEs) (TS 38.321 clause 6.1.3)

## NR_MAC_ControlElementDL_Type

| TTCN-3 Union Type | | |
|---|---|---|
| **Name** | **NR_MAC_ControlElementDL_Type** | |
| **Comment** | TimingInfo : 'Now' or specific activation time | |
| ContentionResolutionID | NR_MAC_CE_ContentionResolutionId_Type | TS 38.321 clause 6.1.3.3 |
| TimingAdvance | NR_MAC_CE_TimingAdvance_Type | TS 38.321 clause 6.1.3.4 |
| SCellActDeact | NR_MAC_CE_SCellActDeact_Type | TS 38.321 clause 6.1.3.10 |
| DuplicationActDeact | NR_MAC_CE_DuplicationActDeact_Type | TS 38.321 clause 6.1.3.11 |
| SP_ResourceSetActDeact | NR_MAC_CE_SP_ResourceSetActDeact_Type | TS 38.321 clause 6.1.3.12 |
| CSI_TriggerStateSubselection | NR_MAC_CE_CSI_TriggerStateSubselection_Type | TS 38.321 clause 6.1.3.13 |
| TCI_StatesActDeact | NR_MAC_CE_TCI_StatesActDeact_Type | TS 38.321 clause 6.1.3.14 |
| TCI_StateIndication | NR_MAC_CE_TCI_StateIndication_Type | TS 38.321 clause 6.1.3.15 |
| SP_CSI_ReportingActDeact | NR_MAC_CE_SP_CSI_ReportingActDeact_Type | TS 38.321 clause 6.1.3.16 |
| SP_SRS_ActDeact | NR_MAC_CE_SP_SRS_ActDeact_Type | TS 38.321 clause 6.1.3.17 |
| PUCCH_SpatialRelationActDeact | NR_MAC_CE_PUCCH_SpatialRelationActDeact_Type | TS 38.321 clause 6.1.3.18 |
| SP_ZP_ResourceSetActDeact | NR_MAC_CE_SP_ZP_ResourceSetActDeact_Type | TS 38.321 clause 6.1.3.19 |
| RecommendatdBitrate | NR_MAC_CE_RecommendedBitrate_Type | TS 38.321 clause 6.1.3.20 |

## NR_MAC_ControlElementUL_Type

| TTCN-3 Union Type | | |
|---|---|---|
| **Name** | **NR_MAC_ControlElementUL_Type** | |
| **Comment** | | |
| ShortBSR | NR_MAC_CE_ShortBSR_Type | TS 38.321 clause 6.1.3.1 |
| LongBSR | NR_MAC_CE_LongBSR_Type | TS 38.321 clause 6.1.3.1 |
| C_RNTI | RNTI_B16_Type | TS 38.321 clause 6.1.3.2 |
| SingleEntryPHR | NR_MAC_CE_SingleEntryPHR_Type | TS 38.321 clause 6.1.3.8 |
| MultiEntryPHR | NR_MAC_CE_MultiEntryPHR_Type | TS 38.321 clause 6.1.3.9 |
| Recommended Bitrate | NR_MAC_CE_RecommendedBitrate_Type | TS 38.321 clause 6.1.3.20 |

#### D.2.1.1.2.1 MAC_ControlElement_Common

**NR_MAC_CE_SCellFlags_Type**

| TTCN-3 Record Type | | | |
|---|---|---|---|
| **Name** | **NR_MAC_CE_SCellFlags_Type** | | |
| **Comment** | bitmap to indicate presence of SCell with SCellIndex according to TS 38.331<br>either SCellIndex7_1 is present only or all octets are present | | |
| SCellIndex7_1 | B8_Type | | leftmost bit corresponds to SCellIndex7, 2nd bit from the right corresponds to SCellIndex1, rightmost bit is reserved |
| SCellIndex15_8 | B8_Type | opt | leftmost bit corresponds to SCellIndex15, rightmost bit corresponds to SCellIndex8 |
| SCellIndex23_16 | B8_Type | opt | leftmost bit corresponds to SCellIndex23, rightmost bit corresponds to SCellIndex16 |
| SCellIndex31_24 | B8_Type | opt | leftmost bit corresponds to SCellIndex31, rightmost bit corresponds to SCellIndex24 |

**NR_MAC_CE_ServCellId_BwpId_Type**

| TTCN-3 Record Type | | | |
|---|---|---|---|
| **Name** | **NR_MAC_CE_ServCellId_BwpId_Type** | | |
| **Comment** | Common definition for first octet of CEs defined in TS 38.321 clause 6.1.3.12 .. TS 38.321 clause 6.1.3.19 | | |
| Field1 | B1_Type | | A/D field for NR_MAC_CE_SP_ResourceSetActDeact_Type and NR_MAC_CE_SP_SRS_ActDeact_Type<br>or<br>CORESET Pool ID for NR_MAC_CE_TCI_StatesActDeact_Type<br>reserved (set to 0) otherwise |
| ServCellId | B5_Type | | identity of the Serving Cell for which the MAC CE applies |
| BwpId | B2_Type | | BWP-Id (as specified in TS 38.331) of the uplink/downlink bandwidth part for which the MAC CE applies |

#### D.2.1.1.2.2 MAC_ControlElement_BSR

TS 38.321 clause 6.1.3.1 (Buffer Status Report MAC CEs)

**MAC_ControlElement_BSR: Basic Type Definitions**

| TTCN-3 Basic Types | | |
|---|---|---|
| **NR_MAC_LongBSR_BufferSize_Type** | O1_Type | |

**NR_MAC_CE_ShortBSR_Type**

| TTCN-3 Record Type | | | |
|---|---|---|---|
| **Name** | **NR_MAC_CE_ShortBSR_Type** | | |
| **Comment** | Short BSR and Short Truncated BSR MAC CE according to TS 38.321 Figure 6.1.3.1-1 | | |
| LCG | B3_Type | | |
| BufferSize | B5_Type | | |

**NR_MAC_LongBSR_BufferSizeList_Type**

| TTCN-3 Record of Type | |
|---|---|
| **Name** | **NR_MAC_LongBSR_BufferSizeList_Type** |
| **Comment** | |
| record length (0..8) of NR_MAC_LongBSR_BufferSize_Type | |

**NR_MAC_CE_LongBSR_Type**

| TTCN-3 Record Type | | | |
|---|---|---|---|
| **Name** | **NR_MAC_CE_LongBSR_Type** | | |
| **Comment** | Long BSR, Long Truncated BSR and Pre-emptive BSR MAC CE according to TS 38.321 Figure 6.1.3.1-2 | | |
| LCG_Presence | B8_Type | | '1' indicates that the Buffer Size field for a logical channel group i is reported,<br>with i = 7 for the leftmost bit and i = 0 for the rightmost |
| BufferSizeList | NR_MAC_LongBSR_BufferSizeList_Type | | According to TS 38.321 clause 6.1.3.1 the Buffer Size fields are included in ascending order based on the LCGi |

### D.2.1.1.2.3 MAC_ControlElement_ContentionResolutionId

TS 38.321 clause 6.1.3.3 (UE Contention Resolution Identity MAC CE)

**MAC_ControlElement_ContentionResolutionId: Basic Type Definitions**

| TTCN-3 Basic Types | | |
|---|---|---|
| **NR_MAC_CE_ContentionResolutionId_Type** | B48_Type | TS 38.321 Figure 6.1.3.3-1; fix size of 48 bits |

### D.2.1.1.2.4 MAC_ControlElement_TimingAdvance

TS 38.321 clause 6.1.3.4 (Timing Advance Command MAC CE)

**NR_MAC_CE_TimingAdvance_Type**

| TTCN-3 Record Type | | | |
|---|---|---|---|
| **Name** | **NR_MAC_CE_TimingAdvance_Type** | | |
| **Comment** | TS 38.321 Figure 6.1.3.4-1 | | |
| TAG_ID | B2_Type | | TAG Identity of the addressed TAG |
| TimingAdvance Command | B6_Type | | index value TA (0..63) used to control the amount of timing adjustment that MAC entity has to apply (as specified in TS 38.213) |

### D.2.1.1.2.5 MAC_ControlElement_PHR

TS 38.321 clause 6.1.3.8 (Single Entry PHR) and 6.1.3.9 (Multiple Entry PHR)

**MAC_ControlElement_PHR: Basic Type Definitions**

| TTCN-3 Basic Types | | |
|---|---|---|
| **NR_MAC_CE_SingleEntryPHR_Type** | NR_MAC_CE_PH_Record_Type | TS 38.321 Figure 6.1.3.8-1 |

**NR_MAC_CE_PH_Record_Type**

| TTCN-3 Record Type | | | |
|---|---|---|---|
| **Name** | **NR_MAC_CE_PH_Record_Type** | | |
| **Comment** | | | |
| P_Bit | B1_Type | | P bit: 1 indicates the UE applies power backoff due to power management;<br>For Single Entry PHR MAC CE: If mpe-Reporting is configured indicates the applied power backoff to meet MPE requirements. |
| V_Bit | B1_Type | | V bit: Indicates when the PH value is based on a real transmission or a reference format;<br>reserved (R = '0'B) for Single Entry PHR MAC CE |
| Value | B6_Type | | The power headroom level. Ph Type 2 (if configured) for PCell and Type 1 for PCell and SCell |
| MPE_or_R | B2_Type | opt | 2 reserved bits or MPE (Maximum Permissible Exposure); present if V=0 |
| PCMaxc | B6_Type | opt | present if V=0 |

**NR_MAC_CE_MultiEntryPHR_Type**

| TTCN-3 Record Type | | | |
|---|---|---|---|
| **Name** | **NR_MAC_CE_MultiEntryPHR_Type** | | |
| **Comment** | TS 38.321 Figure 6.1.3.9-1 and Figure 6.1.3.9-2 | | |
| PHFieldPresentForSCell | NR_MAC_CE_SCellFlags_Type | | to indicate presence of PH field for particular SCell |
| PH_Record | record of NR_MAC_CE_PH_Record_Type | | list of PH_Records for PCell and SCells as described in TS 38.321 clause 6.1.3.9 |

### D.2.1.1.2.6 MAC_ControlElement_SCellActivationDeactivation

TS 38.321 clause 6.1.3.10 (SCell Activation/Deactivation MAC CEs)

**MAC_ControlElement_SCellActivationDeactivation: Basic Type Definitions**

| TTCN-3 Basic Types | | |
|---|---|---|
| **NR_MAC_CE_SCellActDeact_Type** | NR_MAC_CE_SCellFlags_Type | TS 38.321 Figure 6.1.3.10-1 and Figure 6.1.3.10-2 |

### D.2.1.1.2.7 MAC_ControlElement_DuplicationActivationDeactivation

TS 38.321 clause 6.1.3.11 (Duplication Activation/Deactivation MAC CE)

**MAC_ControlElement_DuplicationActivationDeactivation: Basic Type Definitions**

| TTCN-3 Basic Types | | |
|---|---|---|
| **NR_MAC_CE_DuplicationActDeact_Type** | B8_Type | TS 38.321 Figure 6.1.3.11-1 |

### D.2.1.1.2.8 MAC_ControlElement_SP_ResourceSetActivationDeactivation

TS 38.321 clause 6.1.3.12 (SP CSI-RS / CSI-IM Resource Set Activation/Deactivation MAC CE)

### NR_MAC_CE_SP_ResourceSetActDeact_Octet2_Type

| TTCN-3 Record Type | | | |
|---|---|---|---|
| **Name** | **NR_MAC_CE_SP_ResourceSetActDeact_Octet2_Type** | | |
| **Comment** | | | |
| Reserved | B1_Type | | |
| IM | B1_Type | | indicates whether or not octet 3 is present |
| CSI_RS_Resourcesetid | B6_Type | | |

### NR_MAC_CE_SP_ResourceSetActDeact_Octet3_Type

| TTCN-3 Record Type | | | |
|---|---|---|---|
| **Name** | **NR_MAC_CE_SP_ResourceSetActDeact_Octet3_Type** | | |
| **Comment** | | | |
| Reserved | B2_Type | | |
| CSI_IM_Resourcesetid | B6_Type | | |

### NR_MAC_CE_SP_ResourceSetActDeact_TciStateId_Type

| TTCN-3 Record Type | | | |
|---|---|---|---|
| **Name** | **NR_MAC_CE_SP_ResourceSetActDeact_TciStateId_Type** | | |
| **Comment** | | | |
| Reserved | B1_Type | | |
| Id | B7_Type | | |

### NR_MAC_CE_SP_ResourceSetActDeact_TciStateIdList_Type

| TTCN-3 Record of Type | |
|---|---|
| **Name** | **NR_MAC_CE_SP_ResourceSetActDeact_TciStateIdList_Type** |
| **Comment** | |
| record of NR_MAC_CE_SP_ResourceSetActDeact_TciStateId_TypeeId_Type | |

### NR_MAC_CE_SP_ResourceSetActDeact_Type

| TTCN-3 Record Type | | | |
|---|---|---|---|
| **Name** | **NR_MAC_CE_SP_ResourceSetActDeact_Type** | | |
| **Comment** | TS 38.321 Figure 6.1.3.12-1 | | |
| Octet1 | NR_MAC_CE_ServCellId_BwpId_Type | | Field1: A/D field |
| Octet2 | NR_MAC_CE_SP_ResourceSetActDeact_Octet2_Type | | |
| Octet3 | NR_MAC_CE_SP_ResourceSetActDeact_Octet3_Type | opt | present if IM=1 in octet 2 |
| IdList | NR_MAC_CE_SP_ResourceSetActDeact_TciStateIdList_Type | | |

#### D.2.1.1.2.9 MAC_ControlElement_CSI_TriggerStateSubselection

TS 38.321 clause 6.1.3.13 (Aperiodic CSI Trigger State Subselection MAC CE)

**NR_MAC_CE_CSI_TriggerStateSubselection_Type**

| TTCN-3 Record Type | | | |
|---|---|---|---|
| **Name** | **NR_MAC_CE_CSI_TriggerStateSubselection_Type** | | |
| **Comment** | TS 38.321 Figure 6.1.3.13-1 | | |
| Octet1 | NR_MAC_CE_ServCellId_BwpId_Type | | Field1: reserved |
| Selection | B8_List_Type | | |

### D.2.1.1.2.10 MAC_ControlElement_TCI_StatesActivationDeactivation

TS 38.321 clause 6.1.3.14 (TCI States Activation/Deactivation for UE-specific PDSCH MAC CE)

**NR_MAC_CE_TCI_StatesActDeact_Type**

| TTCN-3 Record Type | | | |
|---|---|---|---|
| **Name** | **NR_MAC_CE_TCI_StatesActDeact_Type** | | |
| **Comment** | TS 38.321 Figure 6.1.3.14-1 | | |
| Octet1 | NR_MAC_CE_ServCellId_BwpId_Type | | Field1: CORESET Pool ID field |
| Status | B8_List_Type | | |

### D.2.1.1.2.11 MAC_ControlElement_TCI_StateIndication

TS 38.321 clause 6.1.3.15 (TCI State Indication for UE-specific PDCCH MAC CE)

**NR_MAC_CE_TCI_StateIndication_Type**

| TTCN-3 Record Type | | | |
|---|---|---|---|
| **Name** | **NR_MAC_CE_TCI_StateIndication_Type** | | |
| **Comment** | TS 38.321 Figure 6.1.3.15-1 | | |
| ServCellId | B5_Type | | identity of the Serving Cell for which the MAC CE applies |
| CoresetId | B4_Type | | ControlResourceSetId for which the TCI State is being indicated |
| TciStateId | B7_Type | | TCI-StateId applicable to the Control Resource Set identified by CORESET ID field |

### D.2.1.1.2.12 MAC_ControlElement_SP_CSI_ReportingActivationDeactivation

TS 38.321 clause 6.1.3.16 (SP CSI reporting on PUCCH Activation/Deactivation MAC CE)

**NR_MAC_CE_SP_CSI_ReportingActDeact_Type**

| TTCN-3 Record Type | | | |
|---|---|---|---|
| **Name** | **NR_MAC_CE_SP_CSI_ReportingActDeact_Type** | | |
| **Comment** | TS 38.321 Figure 6.1.3.16-1 | | |
| Octet1 | NR_MAC_CE_ServCellId_BwpId_Type | | Field1: reserved |
| Reserved | B4_Type | | |
| ConfigState | B4_Type | | |

### D.2.1.1.2.13 MAC_ControlElement_SP_SRS_ActivationDeactivation

#### NR_MAC_CE_SP_SRS_ActDeact_Octet2_Type

| TTCN-3 Record Type | | | |
|---|---|---|---|
| **Name** | **NR_MAC_CE_SP_SRS_ActDeact_Octet2_Type** | | |
| **Comment** | TS 38.321 clause 6.1.3.17 (SP SRS Activation/Deactivation MAC CE) | | |
| Reserved | B2_Type | | |
| C | B1_Type | | |
| SUL | B1_Type | | |
| SRS_Resource setId | B4_Type | | |

#### NR_MAC_CE_SP_SRS_ActDeact_ResourceId_Type

| TTCN-3 Record Type | | | |
|---|---|---|---|
| **Name** | **NR_MAC_CE_SP_SRS_ActDeact_ResourceId_Type** | | |
| **Comment** | | | |
| F | B1_Type | | |
| Id | B7_Type | | |

#### NR_MAC_CE_SP_SRS_ActDeact_ResourceIdList_Type

| TTCN-3 Record of Type | |
|---|---|
| **Name** | **NR_MAC_CE_SP_SRS_ActDeact_ResourceIdList_Type** |
| **Comment** | |
| record of NR_MAC_CE_SP_SRS_ActDeact_ResourceId_Typee | |

#### NR_MAC_CE_SP_SRS_ActDeact_ResourceInfo_Type

| TTCN-3 Record Type | | | |
|---|---|---|---|
| **Name** | **NR_MAC_CE_SP_SRS_ActDeact_ResourceInfo_Type** | | |
| **Comment** | | | |
| Reserved | B1_Type | | |
| ServingCellId | B5_Type | | |
| BwpId | B2_Type | | |

#### NR_MAC_CE_SP_SRS_ActDeact_ResourceInfoList_Type

| TTCN-3 Record of Type | |
|---|---|
| **Name** | **NR_MAC_CE_SP_SRS_ActDeact_ResourceInfoList_Type** |
| **Comment** | |
| record of NR_MAC_CE_SP_SRS_ActDeact_ResourceInfo_Typeype | |

**NR_MAC_CE_SP_SRS_ActDeact_Type**

| TTCN-3 Record Type | | | |
|---|---|---|---|
| **Name** | **NR_MAC_CE_SP_SRS_ActDeact_Type** | | |
| **Comment** | TS 38.321 Figure 6.1.3.17-1 | | |
| Octet1 | NR_MAC_CE_ServCellId_BwpId_Type | | Field1: A/D field |
| Octet2 | NR_MAC_CE_SP_SRS_ActDeact_Octet2_Type | | |
| ResourceIdList | NR_MAC_CE_SP_SRS_ActDeact_ResourceIdList_Type | | |
| ResourceInfoList | NR_MAC_CE_SP_SRS_ActDeact_ResourceInfoList_Type | | empty list when C=0 |

### D.2.1.1.2.14 MAC_ControlElement_PUCCH_SpatialRelationActivationDeactivation

TS 38.321 clause 6.1.3.18 (PUCCH spatial relation Activation/Deactivation MAC CE)

**NR_MAC_CE_PUCCH_SpatialRelationActDeact_Octet2_Type**

| TTCN-3 Record Type | | | |
|---|---|---|---|
| **Name** | **NR_MAC_CE_PUCCH_SpatialRelationActDeact_Octet2_Type** | | |
| **Comment** | | | |
| Reserved | B1_Type | | |
| ResourceId | B7_Type | | |

**NR_MAC_CE_PUCCH_SpatialRelationActDeact_Type**

| TTCN-3 Record Type | | | |
|---|---|---|---|
| **Name** | **NR_MAC_CE_PUCCH_SpatialRelationActDeact_Type** | | |
| **Comment** | TS 38.321 Figure 6.1.3.18-1 | | |
| Octet1 | NR_MAC_CE_ServCellId_BwpId_Type | | Field1: reserved |
| Octet2 | NR_MAC_CE_PUCCH_SpatialRelationActDeact_Octet2_Type | | |
| ActivationStatus | B8_Type | | |

### D.2.1.1.2.15 MAC_ControlElement_ZP_ResourceSetActivationDeactivation

TS 38.321 clause 6.1.3.19 (SP ZP CSI-RS Resource Set Activation/Deactivation MAC CE)

**NR_MAC_CE_SP_ZP_ResourceSetActDeact_Octet2_Type**

| TTCN-3 Record Type | | | |
|---|---|---|---|
| **Name** | **NR_MAC_CE_SP_ZP_ResourceSetActDeact_Octet2_Type** | | |
| **Comment** | | | |
| Reserved | B4_Type | | |
| Id | B4_Type | | |

**NR_MAC_CE_SP_ZP_ResourceSetActDeact_Type**

| TTCN-3 Record Type | | | |
|---|---|---|---|
| **Name** | **NR_MAC_CE_SP_ZP_ResourceSetActDeact_Type** | | |
| **Comment** | TS 38.321 Figure 6.1.3.19-1 | | |
| Octet1 | NR_MAC_CE_ServCellId_BwpId_Type | | Field1: A/D field |
| Octet2 | NR_MAC_CE_SP_ZP_ResourceSetActDeact_Octet2_Type | | |

### D.2.1.1.2.16 MAC_ControlElement_RecommendedBitrate

TS 38.321 clause 6.1.3.20 (Recommended bit rate MAC CE)

**NR_MAC_CE_RecommendedBitrate_Type**

| TTCN-3 Record Type | | | |
|---|---|---|---|
| **Name** | **NR_MAC_CE_RecommendedBitrate_Type** | | |
| **Comment** | TS 38.321 Figure 6.1.3.20-1 | | |
| LCID | B6_Type | | |
| UL_DL | B1_Type | | |
| Bitrate | B6_Type | | |
| X | B1_Type | | Bit rate multiplier |
| Reserved | B2_Type | | |

## D.2.1.2 RLC_PDU

**RLC_PDU: Basic Type Definitions**

| TTCN-3 Basic Types | | |
|---|---|---|
| **NR_RLC_SDU_Type** | octetstring | |

**NR_RLC_PDU_Type**

| TTCN-3 Union Type | | |
|---|---|---|
| **Name** | **NR_RLC_PDU_Type** | |
| **Comment** | | |
| TMD | NR_RLC_TMD_PDU_Type | |
| UMD | NR_RLC_UMD_PDU_Type | |
| AMD | NR_RLC_AMD_PDU_Type | |
| Status | NR_RLC_AM_StatusPDU_Type | |

**NR_RLC_PDUList_Type**

| TTCN-3 Record of Type | |
|---|---|
| **Name** | **NR_RLC_PDUList_Type** |
| **Comment** | |
| record of NR_RLC_PDU_Type | |

**NR_RLC_SDUList_Type**

| TTCN-3 Record of Type | |
|---|---|
| **Name** | **NR_RLC_SDUList_Type** |
| **Comment** | |
| record of NR_RLC_SDU_Type | |

### D.2.1.2.1 Common

RLC PDU definition: common AM/UM field definitions

**Common: Basic Type Definitions**

| TTCN-3 Basic Types | | |
|---|---|---|
| **NR_RLC_SegmentationInfo_Type** | B2_Type | Segmentation Info (SI) field (TS 38.322, clause 6.2.3.4)<br>00 - Data field contains all bytes of an RLC SDU<br>01 - Data field contains the first segment of an RLC SDU<br>10 - Data field contains the last segment of an RLC SDU<br>11 - Data field contains neither the first nor last segment of an RLC SDU |
| **NR_RLC_SegmentOffset_Type** | B16_Type | Segment Offset (SO) field (TS 38.322, 6.2.3.5) |

### D.2.1.2.2 TM_Data

RLC PDU definition: UM (TS 38.322, clause 6.2.2.2)

**TM_Data: Basic Type Definitions**

| TTCN-3 Basic Types | | |
|---|---|---|
| **NR_RLC_TMD_PDU_Type** | octetstring | TS 38.322, clause 6.2.2.2 |

### D.2.1.2.3 UM_Data

RLC PDU definition: UM (TS 38.322, clause 6.2.2.3)

**UM_Data: Basic Type Definitions**

| TTCN-3 Basic Types | | |
|---|---|---|
| **NR_RLC_UMD_Data_Type** | octetstring | TS 38.322, clause 6.2.2.3 |

**NR_RLC_UMD_HeaderNoSN_Type**

| TTCN-3 Record Type | | | |
|---|---|---|---|
| **Name** | **NR_RLC_UMD_HeaderNoSN_Type** | | |
| **Comment** | TS 38.322, clause 6.2.2.3 (Figure 6.2.2.3-1; one octet | | |
| SegmentationInfo | NR_RLC_SegmentationInfo_Type | | |
| Reserved | B6_Type | | |

### NR_RLC_UMD_PduNoSN_Type

| TTCN-3 Record Type | | | |
|---|---|---|---|
| **Name** | **NR_RLC_UMD_PduNoSN_Type** | | |
| **Comment** | TS 38.322, clause 6.2.2.3 (Figure 6.2.2.3-1); one octet | | |
| Header | NR_RLC_UMD_HeaderNoSN_Type | | |
| Data | NR_RLC_UMD_Data_Type | | |

### NR_RLC_UMD_HeaderSN6Bit_Type

| TTCN-3 Record Type | | | |
|---|---|---|---|
| **Name** | **NR_RLC_UMD_HeaderSN6Bit_Type** | | |
| **Comment** | TS 38.322, clause 6.2.2.3 (6.2.2.3-2, 6.2.2.3-4); one octet | | |
| SegmentationInfo | NR_RLC_SegmentationInfo_Type | | 2 bits SI |
| SequenceNumber | B6_Type | | 6 bits SN |
| SegmentOffset | NR_RLC_SegmentOffset_Type | opt | 16 bits SO; included in case of segmentation but not for the first segment (TS 38.322 clause 6.2.2.3) |

### NR_RLC_UMD_PduSN6Bit_Type

| TTCN-3 Record Type | | | |
|---|---|---|---|
| **Name** | **NR_RLC_UMD_PduSN6Bit_Type** | | |
| **Comment** | TS 38.322, clause 6.2.2.3 (6.2.2.3-2, 6.2.2.3-4); one octet | | |
| Header | NR_RLC_UMD_HeaderSN6Bit_Type | | |
| Data | NR_RLC_UMD_Data_Type | | |

### NR_RLC_UMD_HeaderSN12Bit_Type

| TTCN-3 Record Type | | | |
|---|---|---|---|
| **Name** | **NR_RLC_UMD_HeaderSN12Bit_Type** | | |
| **Comment** | TS 38.322, clause 6.2.2.3 (Figure 6.2.2.3-3, 6.2.2.3-5); two octets | | |
| SegmentationInfo | NR_RLC_SegmentationInfo_Type | | 2 bits SI |
| Reserved | B2_Type | | 2 bits reserved |
| SequenceNumber | B12_Type | | 12 bits SN |
| SegmentOffset | NR_RLC_SegmentOffset_Type | opt | 16 bits SO; included in case of segmentation but not for the first segment (TS 38.322 clause 6.2.2.3) |

### NR_RLC_UMD_PduSN12Bit_Type

| TTCN-3 Record Type | | | |
|---|---|---|---|
| **Name** | **NR_RLC_UMD_PduSN12Bit_Type** | | |
| **Comment** | TS 38.322, clause 6.2.2.3 (Figure 6.2.2.3-3, 6.2.2.3-5); two octets | | |
| Header | NR_RLC_UMD_HeaderSN12Bit_Type | | |
| Data | NR_RLC_UMD_Data_Type | | |

**NR_RLC_UMD_PDU_Type**

| TTCN-3 Union Type | | |
|---|---|---|
| **Name** | **NR_RLC_UMD_PDU_Type** | |
| **Comment** | | |
| NoSN | NR_RLC_UMD_PduNoSN_Type | |
| SN6Bit | NR_RLC_UMD_PduSN6Bit_Type | |
| SN12Bit | NR_RLC_UMD_PduSN12Bit_Type | |

### D.2.1.2.4 AM_Data

RLC PDU definition: AM (TS 38.322, clause 6.2.2.4)

**AM_Data: Basic Type Definitions**

| TTCN-3 Basic Types | | |
|---|---|---|
| **NR_RLC_AMD_Data_Type** | octetstring | TS 38.322, clause 6.2.2.4 |

**NR_RLC_AMD_HeaderSN12Bit_Type**

| TTCN-3 Record Type | | | |
|---|---|---|---|
| **Name** | **NR_RLC_AMD_HeaderSN12Bit_Type** | | |
| **Comment** | TS 38.322, clause 6.2.2.4 (Figure 6.2.2.4-1, 6.2.2.4-3) | | |
| D_C | B1_Type | | 1 bit, '1'B for Data PDU |
| Poll | B1_Type | | 1 bit, '0'B - Status report not requested<br>'1'B - Status report is requested |
| SegmentationInfo | NR_RLC_SegmentationInfo_Type | | 2 bits SI |
| SequenceNumber | B12_Type | | 12 bits SN |
| SegmentOffset | NR_RLC_SegmentOffset_Type | opt | 16 bits SO; included in case of segmentation but not for the first segment (TS 38.322 clause 6.2.2.4) |

**NR_RLC_AMD_PduSN12Bit_Type**

| TTCN-3 Record Type | | | |
|---|---|---|---|
| **Name** | **NR_RLC_AMD_PduSN12Bit_Type** | | |
| **Comment** | TS 38.322, clause 6.2.2.4 (Figure 6.2.2.4-1, 6.2.2.4-3) | | |
| Header | NR_RLC_AMD_HeaderSN12Bit_Type | | |
| Data | NR_RLC_AMD_Data_Type | | |

**NR_RLC_AMD_HeaderSN18Bit_Type**

| TTCN-3 Record Type | | | |
|---|---|---|---|
| **Name** | **NR_RLC_AMD_HeaderSN18Bit_Type** | | |
| **Comment** | TS 38.322, clause 6.2.2.4 (Figure 6.2.2.4-2, 6.2.2.4-4) | | |
| D_C | B1_Type | | 1 bit, '1'B for Data PDU |
| Poll | B1_Type | | 1 bit, 0 - Status report not requested<br>1 - Status report is requested |
| SegmentationInfo | NR_RLC_SegmentationInfo_Type | | 2 bits SI |
| Reserved | B2_Type | | 2 bits reserved |
| SequenceNumber | B18_Type | | 18 bits SN |
| SegmentOffset | NR_RLC_SegmentOffset_Type | opt | 16 bits SO; included in case of segmentation but not for the first segment (TS 38.322 clause 6.2.2.4) |

**NR_RLC_AMD_PduSN18Bit_Type**

| TTCN-3 Record Type | | | |
|---|---|---|---|
| **Name** | **NR_RLC_AMD_PduSN18Bit_Type** | | |
| **Comment** | TS 38.322, clause 6.2.2.4 Figure 6.2.2.4-2, 6.2.2.4-4) | | |
| Header | NR_RLC_AMD_HeaderSN18Bit_Type | | |
| Data | NR_RLC_AMD_Data_Type | | |

**NR_RLC_AMD_PDU_Type**

| TTCN-3 Union Type | | |
|---|---|---|
| **Name** | **NR_RLC_AMD_PDU_Type** | |
| **Comment** | TS 38.322, clause 6.2.2.4 | |
| SN12Bit | NR_RLC_AMD_PduSN12Bit_Type | |
| SN18Bit | NR_RLC_AMD_PduSN18Bit_Type | |

### D.2.1.2.5 AM_Status

AM Status PDU (TS 36.322, clause 6.2.1.6)

## AM_Status: Basic Type Definitions

| TTCN-3 Basic Types | | |
|---|---|---|
| **NR_RLC_Status_ExtensionBit1_Type** | B1_Type | TS 38.322, clause 6.2.3.11 Extension bit 1 (E1) field:<br>'0'B A set of NACK_SN, E1, E2 and E3 does not follow.<br>'1'B A set of NACK_SN, E1, E2 and E3 follows. |
| **NR_RLC_Status_ExtensionBit2_Type** | B1_Type | TS 38.322, clause 6.2.3.13 Extension bit 2 (E2) field:<br>'0'B A set of SOstart and SOend does not follow for this NACK_SN.<br>'1'B A set of SOstart and SOend follows for this NACK_SN. |
| **NR_RLC_Status_ExtensionBit3_Type** | B1_Type | TS 38.322, clause 6.2.3.16 Extension bit 3 (E3) field:<br>'0'B A set of NACK_SN, E1, E2 and E3 follows.<br>'1'B NACK range field follows for this NACK_SN. |

## NR_RLC_Status_NackSN12Bit_Type

| TTCN-3 Record Type | | | |
|---|---|---|---|
| **Name** | **NR_RLC_Status_NackSN12Bit_Type** | | |
| **Comment** | TS 38.322, clause 6.2.2.5 (Figure 6.2.2.5-1) | | |
| SequenceNumberNACK | B12_Type | | 12 bits SN |
| E1 | NR_RLC_Status_ExtensionBit1_Type | | 1 bit E1 field; set if further NACK set follows |
| E2 | NR_RLC_Status_ExtensionBit2_Type | | 1 bit E2 field |
| E3 | NR_RLC_Status_ExtensionBit3_Type | | 1 bit E3 field |
| Reserved | B1_Type | | 1 bit reserved |
| SOstart | NR_RLC_SegmentOffset_Type | opt | segment offset (start), present only if E2 is set to '1'B |
| SOstop | NR_RLC_SegmentOffset_Type | opt | segment offset (stop), present only if E2 is set to '1'B |
| NACKrange | B8_Type | opt | NACK range, present only if E3 is set to '1'B |

## NR_RLC_Status_NackListSN12Bit_Type

| TTCN-3 Record of Type | |
|---|---|
| **Name** | **NR_RLC_Status_NackListSN12Bit_Type** |
| **Comment** | |
| record of NR_RLC_Status_NackSN12Bit_Type | |

### NR_RLC_StatusPduSN12Bit_Type

| TTCN-3 Record Type | | | |
|---|---|---|---|
| **Name** | **NR_RLC_StatusPduSN12Bit_Type** | | |
| **Comment** | TS 38.322, clause 6.2.2.5 (Figure 6.2.2.5-1) | | |
| D_C | B1_Type | | 1 bit, '0'B for Control PDU |
| CPT | B3_Type | | 3 bits, TS 38.322, clause 6.2.3.9 Control PDU Type (CPT) field:<br>'000'B STATUS PDU<br>ELSE reserved |
| SequenceNumberACK | B12_Type | | 12 bits SN |
| E1 | NR_RLC_Status_ExtensionBit1_Type | | 1 bit E1 field |
| Reserved | B7_Type | | 7 bits reserved |
| NackList | NR_RLC_Status_NackListSN12Bit_Type | opt | zero or more sets of a NACK_SN, E1, E2 and E3 and possibly a pair of SOstart/SOend or NACK range field for each NACK_SN |

### NR_RLC_Status_NackSN18Bit_Type

| TTCN-3 Record Type | | | |
|---|---|---|---|
| **Name** | **NR_RLC_Status_NackSN18Bit_Type** | | |
| **Comment** | TS 38.322, clause 6.2.2.5 (Figure 6.2.2.5-1) | | |
| SequenceNumberNACK | B18_Type | | 18 bits SN |
| E1 | NR_RLC_Status_ExtensionBit1_Type | | 1 bit E1 field; set if further NACK set follows |
| E2 | NR_RLC_Status_ExtensionBit2_Type | | 1 bit E2 field |
| E3 | NR_RLC_Status_ExtensionBit3_Type | | 1 bit E3 field |
| Reserved | B3_Type | | 3 bits reserved |
| SOstart | NR_RLC_SegmentOffset_Type | opt | segment offset (start), present only if E2 is set to '1'B |
| SOstop | NR_RLC_SegmentOffset_Type | opt | segment offset (stop), present only if E2 is set to '1'B |
| NACKrange | B8_Type | opt | NACK range, present only if E3 is set to '1'B |

### NR_RLC_Status_NackListSN18Bit_Type

| TTCN-3 Record of Type | |
|---|---|
| **Name** | **NR_RLC_Status_NackListSN18Bit_Type** |
| **Comment** | |
| record of NR_RLC_Status_NackSN18Bit_Type | |

**NR_RLC_StatusPduSN18Bit_Type**

| TTCN-3 Record Type | | | |
|---|---|---|---|
| **Name** | **NR_RLC_StatusPduSN18Bit_Type** | | |
| **Comment** | TS 38.322, clause 6.2.2.5 (Figure 6.2.2.5-1) | | |
| D_C | B1_Type | | 1 bit, '0'B for Control PDU |
| CPT | B3_Type | | 3 bits, TS 38.322, clause 6.2.3.9 Control PDU Type (CPT) field:<br>'000'B STATUS PDU<br>ELSE reserved |
| SequenceNumberACK | B18_Type | | 18 bits SN |
| E1 | NR_RLC_Status_ExtensionBit1_Type | | 1 bit E1 field |
| Reserved | B1_Type | | 1 bit reserved |
| NackList | NR_RLC_Status_NackListSN18Bit_Type | opt | zero or more sets of a NACK_SN, E1, E2 and E3 and possibly a pair of SOstart/SOend or NACK range field for each NACK_SN |

**NR_RLC_AM_StatusPDU_Type**

| TTCN-3 Union Type | | |
|---|---|---|
| **Name** | **NR_RLC_AM_StatusPDU_Type** | |
| **Comment** | TS 38.322, clause 6.2.254 | |
| SN12Bit | NR_RLC_StatusPduSN12Bit_Type | |
| SN18Bit | NR_RLC_StatusPduSN18Bit_Type | |

## D.2.2 DRB_Primitive_Definitions

Primitive definitions to send/receive data PDUs over DRB's

### D.2.2.1 DRB_Common

**NR_L2DataList_Type**

| TTCN-3 Union Type | | |
|---|---|---|
| **Name** | **NR_L2DataList_Type** | |
| **Comment** | MAC:<br>acc. to rel-15 protocols there is exactly one MAC PDU per TB but in case of spatial multiplexing there can be one or more TB per HARQ process;<br>any MAC PDU is completely included in one slot (TTI)<br>RLC:<br>one or more RLC PDUs per slot (TTI)<br>(e.g. RLC Data + Status PDU on a logical channel;<br>more than one RLC Data PDU in one MAC PDU is valid too)<br>any RLC PDU is completely included in one slot (TTI)<br>PDCP:<br>one or more PDUs per slot (TTI); one PDCP PDU may be included in more than one slot (TTI) | |
| MacPdu | NR_MAC_PDUList_Type | SS configuration: RLC TM mode, MAC no header removal (PDCP is not configured) |
| RlcPdu | NR_RLC_PDUList_Type | SS configuration: RLC TM mode, MAC header removal (PDCP is not configured) |
| RlcSdu | NR_RLC_SDUList_Type | SS configuration: RLC UM mode with no PDCP |
| PdcpPdu | NR_PDCP_PDUList_Type | SS configuration: RLC AM/UM mode, no handling of PDCP header |
| PdcpSdu | NR_PDCP_SDUList_Type | SS configuration: RLC AM/UM mode, PDCP normal mode (automatic handling of PDCP header) |
| SdapPdu | SDAP_PDUList_Type | SS configuration: RLC AM/UM mode, PDCP normal mode (automatic handling of PDCP header), no handling of SDAP header |
| SdapSdu | SDAP_SDUList_Type | SS configuration: RLC AM/UM mode, PDCP normal mode (automatic handling of PDCP header), automatic handling of SDAP header |

**NR_HarqProcessAssignment_Type**

| TTCN-3 Union Type | | |
|---|---|---|
| **Name** | **NR_HarqProcessAssignment_Type** | |
| **Comment** | in DL the HARQ process id may be specified by the test case or automatically assigned by SS | |
| Id | NR_HarqProcessId_Type | HARQ process as specified by the test case<br>NOTE1:<br>the scope of this type is only for data being sent in one slot (TTI); if data needs more than one slot (TTI) the HarqProcessId is undefined for the 2nd TTI onward what shall be handled as an error at the SS; SS may send a SYSTEM_IND indicating an error in this case;<br>NOTE2:<br>The initial value of the NDI shall be the same for all HARQ processes and cells |
| Automatic | Null_Type | HARQ process id automatically assigned by SS |

### D.2.2.2 Downlink

**NR_DRB_DataPerSlot_DL_Type**

| TTCN-3 Record Type | | | |
|---|---|---|---|
| **Name** | **NR_DRB_DataPerSlot_DL_Type** | | |
| **Comment** | common definition for one or several PDUs/SDUs;<br>in NR the DL data is sent in the slot given by the slot offset<br>NOTE 1:<br>For MAC and RLC PDUs a single PDU is always sent in one slot;<br>SS shall raise an error indication (using SYSTEM_IND) when that is not possible<br>NOTE 2:<br>For PDCP the data may be spread over more than one slot (segmented by the RLC);<br>the TTCN implementation is responsible to calculate appropriate offsets accordingly;<br>the exact timing depends on (and is exactly specified by) configuration of the DL scheduling;<br>SS shall raise an error when there is any conflict | | |
| SlotOffset | integer | | NR:<br>Slot offset relative to the absolute timing information given in the common part of the ASP;<br>NOTE:<br>if a PDCP PDU or SDU takes more than one slot, SlotOffset specifies the first slot (TTI) |
| HarqProcess | NR_HarqProcessAssignment_Type | opt | HARQ process to be used: specific value or automatically assigned by SS;<br>in automatic mode SS chooses HARQ process out of the set configured by CcchDcchDtchConfigDL_Type.HarqProcessConfig<br>NOTE:<br>for PDCP SDUs or PDUs automatic mode shall be used;<br>otherwise SS shall raise an error |
| PduSduList | NR_L2DataList_Type | | list of PDUs/SDUs to be sent in one slot (TTI) |

**NR_DRB_DataPerSlotList_DL_Type**

| TTCN-3 Record of Type | |
|---|---|
| **Name** | **NR_DRB_DataPerSlotList_DL_Type** |
| **Comment** | list of user plane data to be sent in slots given by the SlotOffset in the single elements of the list;<br>Timing:<br>the start time for the whole sequence is given by the timing info of the ASP (common information);<br>the timing for the respective data pdus is given by the SlotOffset relative to the common timing info;<br>design consideration:<br>repetitions of this sequence are not foreseen<br>(in which case the slot offset could not be related to the timing info of the ASP) |
| record of NR_DRB_DataPerSlot_DL_Type | |

**NR_L2Data_Request_Type**

| TTCN-3 Record Type | | | |
|---|---|---|---|
| **Name** | **NR_L2Data_Request_Type** | | |
| **Comment** | NOTE: formal type definition to allow later enhancements | | |
| SlotDataList | NR_DRB_DataPerSlotList_DL_Type | | |

### D.2.2.3 Uplink

**NR_DRB_DataPerSlot_UL_Type**

| TTCN-3 Record Type | | | |
|---|---|---|---|
| **Name** | **NR_DRB_DataPerSlot_UL_Type** | | |
| **Comment** | common definition for one or several PDUs/SDUs being received in one slot<br>or to receive one PDCP PDU or SDU being spread over more than one slot (TTI);<br>NOTE:<br>There is a fix relation between HARQ process id and slot in UL<br>=> it is not necessary to include HARQ process id for UL data | | |
| PduSduList | NR_L2DataList_Type | | list of PDUs/SDUs being received in one TTI;<br>elements of the list appear in the same order as the PDUs/SDUs in the MAC PDU;<br>for PDCP when a PDU or SDU takes more than one TTI the list only contains this PDU or SDU |
| NoOfTTIs | integer | | in case of PDCP:<br>number of TTIs the SDU or PDU has taken<br>NOTE 1: for the time being the NoOfTTIs is not checked by TTCN-3 and may be set to 1 by SS;<br>NOTE 2: the timing info in common part of the ASP refers to the last TTI<br>NOTE 3: when NoOfTTIs > 1 => PduSduList shall only contain one PDCP PDU or SDU<br>in case of MAC or RLC PDUs:<br>NoOfTTIs shall always be 1 |

**NR_L2Data_Indication_Type**

| TTCN-3 Record Type | | | |
|---|---|---|---|
| **Name** | **NR_L2Data_Indication_Type** | | |
| **Comment** | NOTE: formal type definition to allow later enhancements;<br>L2Data_Indication_Type defines data being received in a single slot<br>i.e. PDUs of subsequent TTIs are indicated in separated ASPs | | |
| SlotData | NR_DRB_DataPerSlot_UL_Type | | |

## D.2.3 System_Interface

**NR_DRB_COMMON_REQ**

| **TTCN-3 Record Type** | | | |
|---|---|---|---|
| **Name** | **NR_DRB_COMMON_REQ** | | |
| **Comment** | common ASP to send PDUs to DRBs | | |
| Common | NR_ReqAspCommonPart_Type | | CellId : identifier of the cell<br>RoutingInfo : QosFlow when SDAP is configured in non-transparent mode at the SS, else DRB id<br>RlcBearerRouting : TTCN provides the id of the cell in which the SS shall send the data out to the UE (for non-split bearers in general same as CellId)<br>TimingInfo : starting point when to start sending sequence of data PDUs<br>e.g.<br>SFN = X, subframe number = x; slot number = slot_i depending on numerology<br>U_Plane.SubframeDataList[i].SlotOffset := offset_i;<br>=> U_Plane.SubframeDataList[0].PduSduList shall be sent out at (X, x, i)<br>U_Plane.SubframeDataList[i].PduSduList shall be sent out offset_i slots after U_Plane.SubframeDataList[0].PduSduList (depending on the numerology)<br>NOTE: In case of K0>0 (K0 according to 38.214 clause 5.1.2.1) the timing specifies the PDCCH assignment (rather than the PDSCH transmission)<br>ControlInfo : CnfFlag:=false; FollowOnFlag:=false |
| U_Plane | NR_L2Data_Request_Type | | |
| SuppressPdcchForC_RNTI | Null_Type | opt | By default all DRB_COMMON_REQ scheduled DL PDU's are associated with an appropriate explicit configured or SS selected DL assignment allocation on PDCCH.<br>For SuppressPdcch:=true in the sub frame in which DL PDU's are transmitted, there is no associated DL assignment allocation for configured C-RNTI. This will be used for SPS assignment based transmission or in any error scenarios;<br>NOTE: this flag has no impact on PDCCH messages required for SPS activation |

**NR_DRB_COMMON_IND**

| TTCN-3 Record Type | | | |
|---|---|---|---|
| **Name** | **NR_DRB_COMMON_IND** | | |
| **Comment** | common ASP to receive PDUs from DRBs | | |
| Common | NR_IndAspCommonPart_Type | | CellId : identifier of the cell<br>RoutingInfo : QosFlow when SDAP is configured in non-transparent mode at the SS, else DRB id<br>RlcBearerRouting : The SS shall provide the id of the cell in which the data has been sent from the UE<br>TimingInfo : time when message has been received<br>NOTE 1:<br>For MAC and RLC PDUs per definition L2Data_Indication_Type corresponds to exactly one slot<br>=> TimingInfo refers to this slot<br>NOTE 2:<br>For PDCP a single PDU or SDU may take more than one TTI<br>=> TimingInfo refers to the end of the PDU/SDU and the length is given by NoOfTTIs in L2Data_Indication_Type<br>(the end of the PDU/SDU is the last RLC PDU being received; in case of retransmissions this is not necessarily the RLC PDU with the last SN) |
| U_Plane | NR_L2Data_Indication_Type | | |

**NR_DRB_PORT**

| TTCN-3 Port Type | | |
|---|---|---|
| **Name** | **NR_DRB_PORT** | |
| **Comment** | | |
| out | NR_DRB_COMMON_REQ | |
| in | NR_DRB_COMMON_IND | |

# D.3 NR_ASP_SrbDefs

## D.3.1 SRB_DATA_ASPs

ASP Definitions to send/receive peer-to-peer messages on SRBs

## NR_C_Plane_Request_Type

| TTCN-3 Record Type | | | |
|---|---|---|---|
| **Name** | **NR_C_Plane_Request_Type** | | |
| **Comment** | RRC and/or NAS PDU to be send to the UE;<br>Note: it may be necessary to allow more than one NAS PDU (-> "record of") | | |
| Rrc | NR_RRC_MSG_Request_Type | opt | omit: NAS message shall be present; NAS message shall be sent in DLInformationTransfer<br>present: if NAS message is present also, (piggybacked) NAS PDU shall be security protected<br>(if necessary) and inserted in RRC PDU's DedicatedInfoNAS |
| Nas | NG_NAS_MSG_RequestList_Type | opt | omit: RRC message shall be present; RRC message does not contain (piggybacked) NAS PDU<br>present: if RRC message is omitted => NAS message shall be sent embedded in DLInformationTransfer<br>if RRC message is present => NAS message is piggybacked in RRC message<br>in case of RRC message is sent on CCCH, NAS message shall be omitted |

## NR_C_Plane_Indication_Type

| TTCN-3 Record Type | | | |
|---|---|---|---|
| **Name** | **NR_C_Plane_Indication_Type** | | |
| **Comment** | RRC and/or NAS PDU to be received from the UE;<br>Note: it may be necessary to allow more than one NAS PDU (-> "record of") | | |
| Rrc | NR_RRC_MSG_Indication_Type | opt | omit: NAS message shall be present; NAS message is received in ULInformationTransfer<br>present: if NAS message is present also, DedicatedInfoNAS contains unstructured and<br>ciphered NAS message and the NAS message is the deciphered message in structured format |
| Nas | NG_NAS_MSG_IndicationList_Type | opt | omit: RRC message shall be present; RRC message does not contain (piggybacked) NAS PDU<br>present: if RRC message is omitted => NAS message has been received in ULInformationTransfer<br>if RRC message is present => NAS message has been piggybacked in RRC message<br>NOTE:<br>even though currently (DEC 08 ASN.1) there is no RRC PDU in UL containing more than one<br>DedicatedInfoNAS we provide a list to allow extendability |

**NR_SRB_COMMON_REQ**

| TTCN-3 Record Type | | | |
|---|---|---|---|
| **Name** | **NR_SRB_COMMON_REQ** | | |
| **Comment** | common ASP to send PDUs to SRB0, SRB1 or SRB2 | | |
| Common | NR_ReqAspCommonPart_Type | | CellId : identifier of the cell<br>RoutingInfo : SRB0, SRB1, SRB2, SRB3<br>RlcBearerRouting : TTCN provides the id of the cell in which the SS shall send the data out to the UE (for non-split bearers in general same as CellId)<br>TimingInfo : Now in normal cases;<br>For latency tests TimingInfo can be set to the SFN/subframe<br>in which the RRC messages shall be sent out (in this case and<br>if the RRC PDU is too long to be sent in one TTI<br>the TimingInfo corresponds to the first TTI)<br>ControlInfo<br>CnfFlag:=false;<br>FollowOnFlag<br>true: Indicates that the message(s) to be sent on the same TTI will follow<br>NOTE 1: When FollowOnFlag is true, TimingInfo shall always be "Now". Otherwise SS shall produce an error<br>NOTE 2: the FollowOnFlag applies only for messages of the same SRB<br>false: Indicates that no more message(s) will follow |
| Signalling | NR_C_Plane_Request_Type | | |

**NR_SRB_COMMON_IND**

| TTCN-3 Record Type | | | |
|---|---|---|---|
| **Name** | **NR_SRB_COMMON_IND** | | |
| **Comment** | common ASP to receive PDUs from SRB0, SRB1 or SRB2 | | |
| Common | NR_IndAspCommonPart_Type | | CellId : identifier of the cell<br>RoutingInfo : SRB0, SRB1, SRB2, SRB3<br>RlcBearerRouting : The SS shall provide the id of the cell in which the data has been sent from the UE<br>TimingInfo : time when message has been received<br>(as received from the SS by the NAS emulator) |
| Signalling | NR_C_Plane_Indication_Type | | |

## D.3.2 Port_Definitions

**NR_SRB_PORT**

| TTCN-3 Port Type | | |
|---|---|---|
| **Name** | **NR_SRB_PORT** | |
| **Comment** | NR PTC: Port for Sending/Receiving data on SRBs | |
| out | NR_SRB_COMMON_REQ | |
| in | NR_SRB_COMMON_IND | |

**NASEMU_NR_SRB_PORT**

| TTCN-3 Port Type | | |
|---|---|---|
| **Name** | **NASEMU_NR_SRB_PORT** | |
| **Comment** | NASEMU PTC: Port for Sending/Receiving data on SRBs (interface to NR PTC) | |
| out | NR_SRB_COMMON_IND | |
| in | NR_SRB_COMMON_REQ | |

# D.4 NR_CommonDefs

## D.4.1 Common_Types

**Common_Types: Basic Type Definitions**

| TTCN-3 Basic Types | | |
|---|---|---|
| **NR_HarqProcessId_Type** | integer | HARQ process id; NOTE: there seems to be no need for any value restriction |
| **NR_AbsoluteCellPower_Type** | integer (-150..0) | absolute cell power (dBm) |

**NR_RRC_MSG_Request_Type**

| TTCN-3 Union Type | | |
|---|---|---|
| **Name** | **NR_RRC_MSG_Request_Type** | |
| **Comment** | DL RRC PDU on CCCH or DCCH | |
| Ccch | DL_CCCH_Message | |
| Dcch | DL_DCCH_Message | |

**NR_RRC_MSG_Indication_Type**

| TTCN-3 Union Type | | |
|---|---|---|
| **Name** | **NR_RRC_MSG_Indication_Type** | |
| **Comment** | UL RRC PDU on CCCH or DCCH | |
| Ccch | UL_CCCH_Message | |
| Ccch1 | UL_CCCH1_Message | |
| Dcch | UL_DCCH_Message | |

**NR_HarqProcessList_Type**

| TTCN-3 Record of Type | |
|---|---|
| **Name** | **NR_HarqProcessList_Type** |
| **Comment** | list of HARQ processes: each element shall be unique; NOTE: there seems to be no need for any length restriction |
| record of NR_HarqProcessId_Type | |

## D.4.2 RRC_Nested_Types

**RRC_Nested_Types: Basic Type Definitions**

| TTCN-3 Basic Types | | |
|---|---|---|
| **NR_PrioritizedBitRate_Type** | LogicalChannelConfig.ul_SpecificParameters.prioritisedBitRate | |
| **NR_SiPeriodicity_Type** | SchedulingInfo.si_Periodicity | |
| **NR_SiWindowLength_Type** | SI_SchedulingInfo.si_WindowLength | |

## D.4.3 ASP_CommonPart

Definition of ASP common parts for REQ-, CNF- and IND-ASPs

### D.4.3.1 ASP_CommonPart_Definitions

#### D.4.3.1.1 Routing_Info

**Routing_Info: Basic Type Definitions**

| TTCN-3 Basic Types | | |
|---|---|---|
| **NR_RoutingInfoSUL_Type** | Null_Type | |

**NR_RadioBearerId_Type**

| TTCN-3 Union Type | | |
|---|---|---|
| **Name** | **NR_RadioBearerId_Type** | |
| **Comment** | | |
| Srb | SRB_Identity_Type | |
| Drb | DRB_Identity | |

**NR_RoutingInfo_Type**

| TTCN-3 Union Type | | |
|---|---|---|
| **Name** | **NR_RoutingInfo_Type** | |
| **Comment** | | |
| None | Null_Type | |
| RadioBearerId | NR_RadioBearerId_Type | routing of signalling and user plane data when SDAP is not configured at the SS for the DRB or it is configured in transparent mode |
| QosFlow | QosFlow_Identification_Type | routing of user plane data with SDAP being configured in non-transparent mode at the SS |

### D.4.3.2 REQ_ASP_CommonPart

**NR_ReqAspCommonPart_Type**

| TTCN-3 Record Type | | | |
|---|---|---|---|
| **Name** | **NR_ReqAspCommonPart_Type** | | |
| **Comment** | | | |
| CellId | NR_CellId_Type | | |
| RoutingInfo | NR_RoutingInfo_Type | | |
| RlcBearerRouting | RlcBearerRouting_Type | | |
| TimingInfo | TimingInfo_Type | | |
| ControlInfo | ReqAspControlInfo_Type | | |

### D.4.3.3 CNF_ASP_CommonPart

**NR_CnfAspCommonPart_Type**

| TTCN-3 Record Type | | | |
|---|---|---|---|
| **Name** | **NR_CnfAspCommonPart_Type** | | |
| **Comment** | | | |
| CellId | NR_CellId_Type | | |
| RoutingInfo | NR_RoutingInfo_Type | | |
| TimingInfo | TimingInfo_Type | | |
| Result | ConfirmationResult_Type | | |

### D.4.3.4 IND_ASP_CommonPart

**NR_IndAspCommonPart_Type**

| TTCN-3 Record Type | | | |
|---|---|---|---|
| **Name** | **NR_IndAspCommonPart_Type** | | |
| **Comment** | | | |
| CellId | NR_CellId_Type | | |
| RoutingInfo | NR_RoutingInfo_Type | | |
| RoutingInfoSUL | NR_RoutingInfoSUL_Type | opt | Included when data is received from SUL carrier |
| RlcBearerRouting | RlcBearerRouting_Type | | |
| TimingInfo | TimingInfo_Type | | |
| Status | IndicationStatus_Type | | |

## D.5 IP_ASP_TypeDefs

General Notes:
NOTE 1:
In general the handling of IP data shall be independent from the RAT being used on lower layers.
NOTE 2:
It shall be possible for SS implementation to reuse existing IP stack implementations in the system adaptor;
therefore the well-known concept of socket programming shall be supported
(regardless of whether those are used in the system adaptor implementation or not)
NOTE 3:
Since in general at the network side there are several different IP addresses the SS needs to simulate more than one IP

address;
that can be based on a concept of multiple virtual network adaptors
NOTE 4:
There is no easy way to control the routing of IP data for an IP connection from above the IP stack
i.e. there are no parameters at the socket interface to determine e.g. cell id and DRB id
=> another independent logical entity (DRB-MUX) is needed below the IP stack which is responsible to control the routing of IP packets from/to DRBs in different cells of different RATs

Reference:
An introduction to socket programming can be found in
UNIX Network Programming Volume 1, Third Edition: The Sockets Networking API
by W. Richard Stevens, Bill Fenner, Andrew M. Rudoff

## D.5.1 IP_Common

**IP_Common: Basic Type Definitions**

| TTCN-3 Basic Types | | |
|---|---|---|
| **PortNumber_Type** | UInt16_Type | |

**IPv4_AddrInfo_Type**

| TTCN-3 Record Type | | | |
|---|---|---|---|
| **Name** | **IPv4_AddrInfo_Type** | | |
| **Comment** | IPv4 specific info of the socket addr (AF_INET) | | |
| Addr | charstring | | IP Address as string (IP v4 dot notation) to be converted to 32-bit unsigned integer |

**IPv6_AddrInfo_Type**

| TTCN-3 Record Type | | | |
|---|---|---|---|
| **Name** | **IPv6_AddrInfo_Type** | | |
| **Comment** | IPv6 specific info of the socket addr (AF_INET6);<br>NOTE: sin6_flowinfo can be ignored and set to 0 | | |
| Addr | charstring | | to be converted to sin6_addr |
| ScopeId | UInt32_Type | opt | sin6_scope_id<br>in general an IPv6 address is like "fe80::1%eth0" with eth0 being the network adaptor mapped to a scope id (Unix)<br>assumption:<br>for UE conformance testing it is not necessary to distinguish different scopes and the scope id in general can be determined by the system adaptor => omit |

**IP_AddrInfo_Type**

| TTCN-3 Union Type | | |
|---|---|---|
| **Name** | **IP_AddrInfo_Type** | |
| **Comment** | | |
| V4 | IPv4_AddrInfo_Type | |
| V6 | IPv6_AddrInfo_Type | |

**IP_Socket_Type**

| TTCN-3 Record Type | | | |
|---|---|---|---|
| **Name** | **IP_Socket_Type** | | |
| **Comment** | Socket | | |
| IpAddr | IP_AddrInfo_Type | opt | IP address |
| Port | PortNumber_Type | opt | port number |

**InternetProtocol_Type**

| TTCN-3 Enumerated Type | |
|---|---|
| **Name** | **InternetProtocol_Type** |
| **Comment** | |
| udp | |
| tcp | |
| icmp | |
| icmpv6 | |

**IP_Connection_Type**

| TTCN-3 Record Type | | | |
|---|---|---|---|
| **Name** | **IP_Connection_Type** | | |
| **Comment** | A connection between peer-to-peer entities is unambiguously defined by the protocol (udp/tcp/icmp/icmpv4), the local socket and the remote socket | | |
| Protocol | InternetProtocol_Type | | |
| Local | IP_Socket_Type | opt | |
| Remote | IP_Socket_Type | opt | |

## D.5.2 IP_Config

Configuration of the routing table managed be the system adaptor's DRB-MUX:
foreach IP connection it is specified which
- RAT
- Cell
- DRB

to be used.
The IP connection does not need to be fully specified depending on the role SS plays (e.g. in case of a server role the port number of the remote side is not known in advance).
The configurations of DRBs within the same cell shall be mutual exclusive.

With the configuration of the IP routing the DRB is configured either in IP or in raw mode:
either there are entries for the DRB in the routing table (IP mode) or not (raw mode)
=> It is not necessary to reconfigure this for the respective RAT.

Behaviour of the DRB-MUX in UL:
- SS gets data packet from the lower layers (e.g. PDCP SDU)
- SS checks whether there is any IP connection configured for this DRB (identified by {RAT, CellId, DrbId})
  if YES => packet is routed to the IP stack (IP mode)
  if NO => packet is handed over to the DRB port (raw mode)

NOTE 1:
If there is any entry for a DRB in the routing table this DRB is considered as being in IP mode and all UL IP packets are sent to the IP stack regardless of whether their addresses match the DRB's routing entries or not (in general 'unknown' packets are discarded by the IP stack)
=> a DRB can be either in IP or in raw mode

NOTE 2:
=> The SS does not need to evaluate any IP headers to decide whether data shall be routed to the DRB port or to the IP stack (i.e. there is no conflict with unstructured loopback data)

Behaviour of the DRB-MUX in DL:
- SS gets IP packets from the IP stack for an IP connection
- SS compares the IP connection (protocol, local/remote IP Addr) against the IP routing table and checks whether the corresponding protocol stack is configured at the lower layers =>

1. no match:
   no entry in the routing table fits to the address in the IP packet
   or the corresponding RB is not configured
   => SS shall raise an error (DRBMUX_COMMON_IND_CNF.Error)
2. one match:
   There is exactly one possibility to route the IP packet
   => SS shall send the packet to this RB
3. several matches:
   There are more than one DRBs, cells or RATs to which the packet may be routed
   => SS shall raise an error if there is more than one DRB in one cell matching;
      if the DRBs belong to different cells or RATs SS shall send the data to all of them
      (whether this may occur in test cases is FFS)

General notes:
NOTE 1:
SS may use the information of the routing table to determine which network adaptors it needs to simulate (implementation dependent);
in general there will be more than one IP address at the network side.
NOTE 2:
In general the routing table is a simplified DL TFT implementation
NOTE 3:
When the routing table is empty all DRBs are in raw mode; this shall be the initial condition at the DRB-MUX;
=> for L2 testing in general (and apart from the preamble) there is no need to use/configure the IP_PTC; the configuration of the RAT specific U-plane stacks is not affected

### IP_DataMode_Type

| TTCN-3 Enumerated Type | |
|---|---|
| **Name** | **IP_DataMode_Type** |
| **Comment** | |
| discard | |
| loopbackRTP | |
| loopbackRTCP | |
| IPsecTunnel | |

**IP_RoutingInfo_Type**

| TTCN-3 Record Type | | | |
|---|---|---|---|
| **Name** | **IP_RoutingInfo_Type** | | |
| **Comment** | | | |
| IpInfo | IP_Connection_Type | | IP connection tuple: protocol, local socket, remote socket depending on the role the SS plays the following information may be provided<br>(informative; even less information can be sufficient):<br>1. TCP/UDP server<br>- local IP addr -- provided<br>- local port -- provided<br>- remote IP addr -- omit<br>- remote port -- omit<br>2. TCP/UDP client<br>- local IP addr -- provided<br>(to inform SS about the local IP addr for this service)<br>- local port -- omit;<br>for UDP a well-defined port may be defined<br>(protocol dependent, e.g. DHCP)<br>- remote IP addr -- provided<br>- remote port -- provided<br>3. ICMP (in general ICMP may be mapped only to a single DRB)<br>- local IP addr -- provided<br>(to inform SS about the local IP addr for this service)<br>- local port -- n/a (shall be set to omit)<br>- remote IP addr -- omit<br>- remote port -- n/a (shall be set to omit)<br><br>NOTE:<br>In case of broadcasts in UL the broadcast address shall match any local IP address;<br>in DL for broadcast services typically no remote IP address is specified in the routing table |
| DRB | IP_DrbInfo_Type | | |
| DataMode | IP_DataMode_Type | opt | present when IP packets matching this entry shall be discarded or be looped back to the UE as defined for RTP or RTCP |

**IP_RoutingTable_Type**

| TTCN-3 Record of Type | |
|---|---|
| **Name** | **IP_RoutingTable_Type** |
| **Comment** | NOTE: configurations of DRBs within the same cell shall be mutual exclusive |
| record of IP_RoutingInfo_Type | |

## D.5.3 IPsec_Config

**IP_ASP_TypeDefs: Constant Definitions**

| TTCN-3 Basic Types | | | |
|---|---|---|---|
| **tsc_IPsec_SPI_Max** | integer | 4294967295 | |

## IPsec_Config: Basic Type Definitions

| TTCN-3 Basic Types | | |
|---|---|---|
| **IPsec_SPI_Type** | integer (0..tsc_IPsec_SPI_Max) | security parameter index for IPsec;<br>According to RFC 2406, SPI values from 0 to 255 are reserved |

## IPsec_IntegrityAlgorithm_Type

| TTCN-3 Enumerated Type | |
|---|---|
| **Name** | **IPsec_IntegrityAlgorithm_Type** |
| **Comment** | |
| hmac_md5_96 | |
| hmac_sha_1_96 | |

## IPsec_CipheringAlgorithm_Type

| TTCN-3 Enumerated Type | |
|---|---|
| **Name** | **IPsec_CipheringAlgorithm_Type** |
| **Comment** | |
| des_ede3_cbc | |
| aes_cbc | |
| nociph | no ciphering |

## IPsec_SecurityKeys_Type

| TTCN-3 Record Type | | | |
|---|---|---|---|
| **Name** | **IPsec_SecurityKeys_Type** | | |
| **Comment** | to install the security keys | | |
| MD5_96Key | bitstring length (128) | | |
| SHA_1_96Key | bitstring length (160) | | |
| DES_EDE3_CBCKey | bitstring length (192) | | |
| AES_CBCKey | bitstring length (128) | | |

## IPsec_SecurityAssociation_Type

| TTCN-3 Record Type | | | |
|---|---|---|---|
| **Name** | **IPsec_SecurityAssociation_Type** | | |
| **Comment** | single security association (SA);<br>for configuration of an SA at the SS all fields are mandatory;<br>to release an SA the optional information is omitted | | |
| SPI | IPsec_SPI_Type | | |
| SrcAddress | charstring | | |
| DestAddress | charstring | | |
| SrcPort | UInt16_Type | | |
| DestPort | UInt16_Type | | |
| IntegrityAlgorithm | IPsec_IntegrityAlgorithm_Type | opt | mandatory to set-up an SA |
| CipheringAlgorithm | IPsec_CipheringAlgorithm_Type | opt | mandatory to set-up an SA |

**IPsec_SecurityAssociationList_Type**

| TTCN-3 Record of Type | |
|---|---|
| **Name** | **IPsec_SecurityAssociationList_Type** |
| **Comment** | |
| record of IPsec_SecurityAssociation_Type | |

**IPsec_Configure_Type**

| TTCN-3 Record Type | | | |
|---|---|---|---|
| **Name** | **IPsec_Configure_Type** | | |
| **Comment** | add new security associations; existing SAs are not affected | | |
| SA_List | IPsec_SecurityAssociationList_Type | | |
| SecurityKeys | IPsec_SecurityKeys_Type | | |

**IPsec_Release_Type**

| TTCN-3 Record Type | | | |
|---|---|---|---|
| **Name** | **IPsec_Release_Type** | | |
| **Comment** | release security associations;<br>NOTE:<br>in context with multiple PDNs it cannot be ensured that all SPIs are unique;<br>e.g. the UE may use the same SPI values in different PDNs in which case uniqueness cannot be achieved<br>furthermore it depends on the system implementation how entries in the IPsec SAD and SPD are administrated<br>=> to release SAs the SS gets the same information as for configuration but without the security algorithms | | |
| SA_List | IPsec_SecurityAssociationList_Type | | |

## D.5.4 IP_SocketHandling

Handling of IP data and IP connections
NOTE 1:
In general IP connections are distinguished by the tuple {protocol, local socket, remote socket};
this information is used at the interface between TTCN and the system adaptor.
It is up the system adaptor implementation to associate the IP connection with the internal socket (file descriptor; implementation dependent)
NOTE 2:
In general the association of the IP connections to (internal) sockets and the routing table for the DRB mapping (as configured with IP_RoutingTable_Type) are independent from each other

### D.5.4.1 Socket_Common

**IP_SockOpt_Type**

| TTCN-3 Union Type | | |
|---|---|---|
| **Name** | **IP_SockOpt_Type** | |
| **Comment** | socket options acc. to the setsockopt system call (i.e. for level=SOL_SOCKET in case of Berkeley socket API);<br>NOTE:<br>only options being relevant for a specific applications (upon a socket) are configured by TTCN<br>other options (e.g. SO_REUSEADDR) are out of TTCN and therefore a matter of system adaptor implementation | |
| SO_BROADCAST | boolean | set to true when IP broadcast messages shall be allowed for a port;<br>this is required e.g. in case of DHCP |
| IP_MTU_SIZE | integer | MTU size to be used for IP data;<br>NOTEs:<br>- Even though the MTU size is defined as socket option it shall be the same for all sockets of a given interface (i.e. at least within one PDN the MTU size shall be the same)<br>- in general a PIXIT is used as constant value for all sockets |

**IP_SockOptList_Type**

| TTCN-3 Record of Type | |
|---|---|
| **Name** | **IP_SockOptList_Type** |
| **Comment** | |
| record of IP_SockOpt_Type | |

**IP_SocketError_Type**

| TTCN-3 Union Type | | |
|---|---|---|
| **Name** | **IP_SocketError_Type** | |
| **Comment** | used to indicate errors related to sockets;<br>the IP_Connection shall contain as much address information as available at the system adaptor | |
| InvalidAddress | Null_Type | TTCN error: e.g. invalid or incomplete address information |
| System | integer | system error caused by system call;<br>the integer value may be used for validation but shall not be evaluated by TTCN |

### D.5.4.2 Socket_Datagram

**Socket_Datagram: Basic Type Definitions**

| TTCN-3 Basic Types | | |
|---|---|---|
| **Datagram_Content_Type** | octetstring | data as sent/received with sendto()/recvfrom() on UDP or ICMP socket;<br>NOTE:<br>For ICMP the data may depend on the socket options;<br>in general it does not include the IP header and<br>the checksum of the ICMP packet needs to be calculated/checked in TTCN |

**Datagram_DL_Type**

| TTCN-3 Record Type | | | |
|---|---|---|---|
| **Name** | **Datagram_DL_Type** | | |
| **Comment** | datagram to be sent at a UDP or ICMP socket | | |
| Buffer | Datagram_Content_Type | | content of the IP packet |

**Datagram_UL_Type**

| TTCN-3 Record Type | | | |
|---|---|---|---|
| **Name** | **Datagram_UL_Type** | | |
| **Comment** | datagram as received on a UDP or ICMP socket | | |
| Buffer | Datagram_Content_Type | | content of the IP packet |
| DrbInfo | IP_DrbInfo_Type | opt | "interface id" where the data comes from in case of broadcast or multicast packets:<br>for the LTE test model this is the DRB on which the IP packet has been received;<br>the information is necessary when the SS cannot resolve an IP address being assigned to that DRB.<br>=> when the SS provides a broadcast or multicast address as local address in the ConnectionId of the ASP, the SS shall provide the DRB information in this field<br>When the ConnectionId of the ASP is fully specified and unique (unicast address at least for local address) the DrbId is ignored by TTCN |

## D.5.4.3 TCP_Socket

TCP primitives used on the IP port

**TCP_Socket: Basic Type Definitions**

| TTCN-3 Basic Types | | |
|---|---|---|
| **TCP_Data_Type** | octetstring | data as sent/received with send()/recv() on a TCP socket |

**InternetApplication_Type**

| TTCN-3 Enumerated Type | |
|---|---|
| **Name** | **InternetApplication_Type** |
| **Comment** | as TCP is stream oriented SS may need information about which criteria to be applied to get start/end of an application message |
| ims | |
| http | |

### TLS_CIPHER_Type

| TTCN-3 Enumerated Type | |
|---|---|
| **Name** | **TLS_CIPHER_Type** |
| **Comment** | Cipher suite to be used for TLS |
| TLS_PSK_WITH_RC4_128_SHA | RFC 4279 |
| TLS_PSK_WITH_3DES_EDE_CBC_SHA | RFC 4279 |
| TLS_PSK_WITH_AES_128_CBC_SHA | RFC 4279 |
| TLS_PSK_WITH_AES_256_CBC_SHA | RFC 4279 |
| TLS_PSK_WITH_AES_128_CBC_SHA256 | RFC 5487 |
| TLS_RSA_WITH_NULL_MD5 | RFC 5246 |
| TLS_RSA_WITH_NULL_SHA | RFC 5246 |
| TLS_RSA_WITH_NULL_SHA256 | RFC 5246 |
| TLS_RSA_WITH_RC4_128_MD5 | RFC 5246 |
| TLS_RSA_WITH_RC4_128_SHA | RFC 5246 |
| TLS_RSA_WITH_3DES_EDE_CBC_SHA | RFC 5246 |
| TLS_RSA_WITH_AES_128_CBC_SHA | RFC 5246 |
| TLS_RSA_WITH_AES_256_CBC_SHA | RFC 5246 |
| TLS_RSA_WITH_AES_128_CBC_SHA256 | RFC 5246 |
| TLS_RSA_WITH_AES_256_CBC_SHA256 | RFC 5246 |

### PSK_BootstrappingInfo_Type

| TTCN-3 Record Type | | | |
|---|---|---|---|
| **Name** | **PSK_BootstrappingInfo_Type** | | |
| **Comment** | bootstrapping information as defined in 24.109 | | |
| BTid | charstring | | |
| Ks_NAF | bitstring | | |

### TLS_PSK_Info_Type

| TTCN-3 Record Type | | | |
|---|---|---|---|
| **Name** | **TLS_PSK_Info_Type** | | |
| **Comment** | configuration information for PSK TLS | | |
| IdentityHint | charstring | | |
| BootstrappingInfo | PSK_BootstrappingInfo_Type | | |

### TLS_CipherSuiteInfo_Type

| TTCN-3 Union Type | | |
|---|---|---|
| **Name** | **TLS_CipherSuiteInfo_Type** | |
| **Comment** | | |
| psk | TLS_PSK_Info_Type | |

### TLSPSKInfo_Type

| TTCN-3 Record Type | | | |
|---|---|---|---|
| **Name** | **TLSPSKInfo_Type** | | |
| **Comment** | | | |
| cipherSuite | TLS_CIPHER_Type | | Cipher suite to be used |
| cipherSuiteInfo | TLS_CipherSuiteInfo_Type | | parameters for the respective cipher suite |

### TLSCertificateInfo_Type

| TTCN-3 Record Type | | | |
|---|---|---|---|
| **Name** | **TLSCertificateInfo_Type** | | |
| **Comment** | | | |
| certificate | charstring | | name or file location of the certificate to be used by the SS; in general provided by a PIXIT:<br>the PIXIT contains the SS implementation specific information for the SS to identify the certificate to be used for a particular TLS connection;<br>in case of only one certificate being used by TTCN, the string may be empty |
| cipherSuite | TLS_CIPHER_Type | | (non-PSK) cipher suite to be used for the TLS tunnel; the SS shall raise an error when it detects that the UE does not support the configured cipher suite |

### TLSConfig_Type

| TTCN-3 Union Type | | |
|---|---|---|
| **Name** | **TLSConfig_Type** | |
| **Comment** | | |
| pskInfo | TLSPSKInfo_Type | Used in the case of PSK |
| certificateInfo | TLSCertificateInfo_Type | Used  in the case of certificate based TLS |

### TCP_ConnectRequest_Type

| TTCN-3 Record Type | | | |
|---|---|---|---|
| **Name** | **TCP_ConnectRequest_Type** | | |
| **Comment** | TCP client: -> 'connect' system call | | |
| SockOptList | IP_SockOptList_Type | | when there are no options to configure the list is empty |
| Application | InternetApplication_Type | | to specify start/end criteria for application messages |

### TCP_Listen_Type

| TTCN-3 Record Type | | | |
|---|---|---|---|
| **Name** | **TCP_Listen_Type** | | |
| **Comment** | TCP server: -> 'listen' system call | | |
| SockOptList | IP_SockOptList_Type | | when there are no options to configure the list is empty |
| Application | InternetApplication_Type | | to specify start/end criteria for application messages |
| TLSConfig | TLSConfig_Type | opt | to support TLS for HTTP server implementation |

## TCP_CtrlRequest_Type

| TTCN-3 Union Type | | |
|---|---|---|
| **Name** | **TCP_CtrlRequest_Type** | |
| **Comment** | | |
| ConnectReq | TCP_ConnectRequest_Type | request a 'connect' to a remote server<br><br>system calls (informative)<br>socket -- get file descriptor<br>(setsockopt) -- normally not needed<br>bind -- assign local IP addr (to cope with multiple IP addresses) and dedicated port number (if local port is given)<br>connect -- connect to the client<br><br>IP_Connection:<br>protocol -- tcp<br>local IP addr -- mandatory to distinguish different network adaptors<br>local port -- omit (ephemeral port will be assigned by the system) or specific port to be used for this connection (e.g. to bind a given port number to the IMS client)<br>remote IP addr -- mandatory<br>remote port -- mandatory |
| Listen | TCP_Listen_Type | establish a server at the local (SS) side<br><br>system calls (informative)<br>socket -- get file descriptor<br>(setsockopt) -- if needed<br>bind -- assign local IP addr and port<br>listen -- await incoming connection<br><br>IP_Connection:<br>protocol -- tcp<br>local IP addr -- mandatory to distinguish different network adaptors<br>local port -- mandatory<br>remote IP add -- omit<br>remote port -- omit |
| Close | Null_Type | close a connection<br><br>system calls (informative):<br>close<br><br>IP_Connection:<br>protocol -- tcp<br>local IP addr -- mandatory<br>local port -- mandatory<br>remote IP addr -- mandatory for TCP connections, omit for TCP server<br>remote port -- mandatory for TCP connections, omit for TCP server |

## TCP_DataRequest_Type

| TTCN-3 Union Type | | |
|---|---|---|
| **Name** | **TCP_DataRequest_Type** | |
| **Comment** | | |
| Send | TCP_Data_Type | send data<br><br>system calls (informative):<br>send or write<br><br>IP_Connection:<br>protocol -- tcp<br>local IP addr -- mandatory<br>local port -- mandatory<br>remote IP addr -- mandatory<br>remote port -- mandatory |

## TCP_CtrlIndication_Type

| TTCN-3 Union Type | | |
|---|---|---|
| **Name** | **TCP_CtrlIndication_Type** | |
| **Comment** | | |
| ConnectCnf | Null_Type | confirm a 'connect' to a remote server<br><br>system calls (informative):<br>getsockname -- get local port (ephemeral port assigned by the system)<br><br>IP_Connection:<br>protocol -- tcp<br>local IP addr -- mandatory (as in corresponding TCP_ConnectRequest)<br>local port -- mandatory (if there is more than one connection to the same server the local port is necessary to distinguish the connections)<br>remote IP addr -- mandatory (as in corresponding TCP_ConnectRequest)<br>remote port -- mandatory (as in corresponding TCP_ConnectRequest) |
| Accept | Null_Type | sent by the SS when it 'accepts' an incoming connection<br><br>system calls (informative):<br>accept<br><br>IP_Connection:<br>protocol -- tcp<br>local IP addr -- mandatory (as in corresponding TCP_ListenRequest)<br>local port -- mandatory (as in corresponding TCP_ListenRequest)<br>remote IP addr -- mandatory (as gotten from 'accept')<br>remote port -- mandatory (as gotten from 'accept') |
| Close | Null_Type | indicate 'close' by the remote side<br><br>system calls (informative):<br>indicated by recv or read<br><br>IP_Connection:<br>protocol -- tcp<br>local IP addr -- mandatory<br>local port -- mandatory<br>remote IP addr -- mandatory<br>remote port -- mandatory |
| CloseCnf | Null_Type | Confirmation for 'close' request; necessary since for TCP there are IP packets to release the connection<br><br>system calls (informative):<br>close<br><br>IP_Connection:<br>protocol -- tcp<br>local IP addr -- mandatory<br>local port -- mandatory<br>remote IP addr -- mandatory for TCP connections, omit for TCP server<br>remote port -- mandatory for TCP connections, omit for TCP server |

**TCP_DataIndication_Type**

| TTCN-3 Union Type | | |
|---|---|---|
| **Name** | **TCP_DataIndication_Type** | |
| **Comment** | | |
| Recv | TCP_Data_Type | receive data<br><br>system calls (informative):<br>recv or read<br><br>IP_Connection:<br>protocol -- tcp<br>local IP addr -- mandatory<br>local port -- mandatory<br>remote IP addr -- mandatory<br>remote port -- mandatory |

## D.5.4.4 UDP_Socket

UDP primitives used on the IP port
NOTE:
In principle a UDP socket may communicate with different remote entities;
therefore the system adaptor may associate the socket handle with the local socket only
(local IP address and local port)

**UDP_SocketReq_Type**

| TTCN-3 Record Type | | | |
|---|---|---|---|
| **Name** | **UDP_SocketReq_Type** | | |
| **Comment** | to establish a UDP server or to bind local port number | | |
| SockOptList | IP_SockOptList_Type | | e.g. to allow broadcast messages;<br>when there are no options to configure the list is empty |

## UDP_CtrlRequest_Type

| TTCN-3 Union Type | | |
|---|---|---|
| **Name** | **UDP_CtrlRequest_Type** | |
| **Comment** | | |
| SocketReq | UDP_SocketReq_Type | request the system adaptor to bind a socket to a local address; this is needed in general when the system adaptor acts as<br>1. UDP server<br>2. UDP client when it uses a well-known port rather than an ephemeral port (this is e.g. for DHCP)<br>3. UDP client when a local address needs to be bond (e.g. when there are several local addresses)<br><br>system calls (informative):<br>socket -- get file descriptor<br>(setsockopt) -- needed e.g. to allow broad cast message<br>bind -- assign local IP address (to cope with multiple IP addresses) and local port (in case of well-known local port)<br><br>IP_Connection:<br>protocol -- udp<br>local IP addr -- mandatory (to distinguish multiple IP addresses)<br>local port -- optional (mandatory in case of a UDP server)<br>remote IP addr -- omit<br>remote port -- omit |
| Close | Null_Type | release local socket<br><br>system calls (informative):<br>close<br><br>IP_Connection:<br>protocol -- udp<br>local IP addr -- mandatory (to identify local socket)<br>local port -- mandatory (to identify local socket)<br>remote IP addr -- omit<br>remote port -- omit |

### UDP_DataRequest_Type

| TTCN-3 Union Type | | |
|---|---|---|
| **Name** | **UDP_DataRequest_Type** | |
| **Comment** | | |
| SendTo | Datagram_DL_Type | send data to (any) remote socket;<br>NOTE:<br>To simplify implementation of the system adaptor the local socket shall be bond in any case (using 'SocketReq') to specify the local IP address before sending data;<br>(in general the sendto system call can be used without explicitly binding the socket before;<br>in this case the port gets implicitly bond to an ephemeral port and the default IP address is used)<br><br>system calls (informative):<br>sendto<br><br>IP_Connection:<br>protocol -- udp<br>local IP addr -- mandatory (to identify local socket)<br>local port -- mandatory (to identify local socket)<br>remote IP addr -- mandatory (to address remote socket)<br>remote port -- mandatory (to address remote socket) |

### UDP_CtrlIndication_Type

| TTCN-3 Union Type | | |
|---|---|---|
| **Name** | **UDP_CtrlIndication_Type** | |
| **Comment** | | |
| SocketCnf | Null_Type | confirm 'SocketReq' and tell TTCN about assignment of ephemeral port;<br><br>system calls (informative):<br>getsockname -- get local port (ephemeral port assigned by the system; not needed if local port is well-known)<br><br>IP_Connection:<br>protocol -- udp<br>local IP addr -- mandatory<br>local port -- mandatory (well-known or ephemeral port assigned by the system)<br>remote IP addr -- omit<br>remote port -- omit |

**UDP_DataIndication_Type**

| TTCN-3 Union Type | | |
|---|---|---|
| **Name** | **UDP_DataIndication_Type** | |
| **Comment** | | |
| RecvFrom | Datagram_UL_Type | receive data;<br><br>system calls (informative):<br>recvfrom -- get data and src addr<br><br>IP_Connection:<br>protocol -- udp<br>local IP addr -- mandatory (see note)<br>local port -- mandatory<br>remote IP addr -- mandatory (as gotten from recvfrom)<br>remote port -- mandatory (as gotten from recvfrom)<br><br>NOTE:<br>The UE may send a UDP packet as broadcast (IP Addr 255.255.255.255 - e.g. in case of DHCP) or multicast (e.g. ICMPv6)<br>SS shall consider a broadcast address as matching every IP for UL and DL;<br>the SS shall not replace the broadcast/multicast address by the local unicast address, but shall provide DRB information in RecvFrom;<br>example:<br>- SS gets DHCPDISCOVER with DEST_Addr=255.255.255.255 DEST_Port=67, SRC_Addr=0.0.0.0 SRC_Port=68<br>- TTCN gets DHCPDISCOVER with local Addr=(255.255.255.255 Port=67), remote Addr=(0.0.0.0 Port=68), DrbId=(LTE, cell1, DRB1)<br>- TTCN sends DHCPOFFER with local Addr=(local IP Addr Port=67), remote Addr=(255.255.255.255 Port=68) |

## D.5.4.5 ICMP_Socket

ICMP primitives used on the IP port
NOTE:
the local side is identified by the protocol and in general by the local IP address

**ICMP_SocketReq_Type**

| TTCN-3 Record Type | | | |
|---|---|---|---|
| **Name** | **ICMP_SocketReq_Type** | | |
| **Comment** | to establish a raw socket to send/receive ICMP packets | | |
| SockOptList | IP_SockOptList_Type | | e.g. to set the IP_HDRINCL socket option (to include the IP header in the data buffer)<br>when there are no options to configure the list is empty |

### ICMP_CtrlRequest_Type

| TTCN-3 Union Type | | |
|---|---|---|
| **Name** | **ICMP_CtrlRequest_Type** | |
| **Comment** | | |
| SocketReq | ICMP_SocketReq_Type | request the system adaptor to open a raw socket (IPv4 or IPv6)<br><br>system calls (informative):<br>socket -- get file descriptor (IPPROTO_ICMP or IPPROTO_IPV6);<br>(setsockopt) -- optional; to set socket options<br>bind -- assign local IP address (to cope with multiple IP addresses)<br><br>IP_Connection:<br>protocol -- icmp or icmpv6<br>local IP addr -- mandatory (to distinguish multiple IP addresses)<br>local port -- omit (not applicable for ICMP)<br>remote IP addr -- omit<br>remote port -- omit (not applicable for ICMP) |
| Close | Null_Type | release local socket<br><br>system calls (informative):<br>close<br><br>IP_Connection:<br>protocol -- icmp or icmpv6<br>local IP addr -- mandatory (to identify local socket)<br>local port -- omit<br>remote IP addr -- omit<br>remote port -- omit |

### ICMP_DataRequest_Type

| TTCN-3 Union Type | | |
|---|---|---|
| **Name** | **ICMP_DataRequest_Type** | |
| **Comment** | | |
| SendTo | Datagram_DL_Type | send datagram<br><br>system calls (informative):<br>sendto<br><br>IP_Connection:<br>protocol -- icmp or icmpv6<br>local IP addr -- mandatory (to identify local socket)<br>local port -- omit<br>remote IP addr -- mandatory<br>remote port -- omit |

**ICMP_CtrlIndication_Type**

| TTCN-3 Union Type | | |
|---|---|---|
| **Name** | **ICMP_CtrlIndication_Type** | |
| **Comment** | | |
| SocketCnf | Null_Type | confirm 'SocketReq'<br><br>system calls (informative):<br>(SocketCnf is sent when all system calls for SocketReq have been successful)<br><br>IP_Connection:<br>protocol -- icmp or icmpv6<br>local IP addr -- mandatory<br>local port -- omit<br>remote IP addr -- omit<br>remote port -- omit |

**ICMP_DataIndication_Type**

| TTCN-3 Union Type | | |
|---|---|---|
| **Name** | **ICMP_DataIndication_Type** | |
| **Comment** | | |
| RecvFrom | Datagram_UL_Type | receive datagram<br><br>system calls (informative):<br>recvfrom -- get data and src addr<br><br>IP_Connection:<br>protocol -- icmp or icmpv6<br>local IP addr -- mandatory (see note)<br>local port -- omit<br>remote IP addr -- mandatory (as gotten from recvfrom)<br>remote port -- omit<br><br>NOTE:<br>As for UDP there may be multicast/broadcast packets.<br>In this case - as for UDP - the SS shall provide the DRB information in RecvFrom. |

## D.5.4.6 Socket_Primitives

**IP_CtrlRequest_Type**

| TTCN-3 Union Type | | |
|---|---|---|
| **Name** | **IP_CtrlRequest_Type** | |
| **Comment** | | |
| TCP | TCP_CtrlRequest_Type | |
| UDP | UDP_CtrlRequest_Type | |
| ICMP | ICMP_CtrlRequest_Type | |

**IP_DataRequest_Type**

| TTCN-3 Union Type | | |
|---|---|---|
| **Name** | **IP_DataRequest_Type** | |
| **Comment** | | |
| TCP | TCP_DataRequest_Type | |
| UDP | UDP_DataRequest_Type | |
| ICMP | ICMP_DataRequest_Type | |

**IP_CtrlIndication_Type**

| TTCN-3 Union Type | | |
|---|---|---|
| **Name** | **IP_CtrlIndication_Type** | |
| **Comment** | | |
| TCP | TCP_CtrlIndication_Type | |
| UDP | UDP_CtrlIndication_Type | |
| ICMP | ICMP_CtrlIndication_Type | |
| Error | IP_SocketError_Type | |

**IP_DataIndication_Type**

| TTCN-3 Union Type | | |
|---|---|---|
| **Name** | **IP_DataIndication_Type** | |
| **Comment** | | |
| TCP | TCP_DataIndication_Type | |
| UDP | UDP_DataIndication_Type | |
| ICMP | ICMP_DataIndication_Type | |

## D.5.5 System_Interface

**DRBMUX_CONFIG_REQ**

| TTCN-3 Union Type | | |
|---|---|---|
| **Name** | **DRBMUX_CONFIG_REQ** | |
| **Comment** | NOTE 1:<br>There is just one primitive to configure the whole routing table.<br>It is not foreseen to add, remove or manipulate single entries but the table is managed in TTCN and completely configured on any change; (otherwise it might get complicated to identify single entries)<br>NOTE 2:<br>the SS's routing table shall be empty at the beginning and can be cleared by an empty record (DRBMUX_CONFIG_REQ.RoutingInfo = {})<br>NOTE 3:<br>In general a reconfiguration of the routing table during a test case would be necessary only if an ephemeral port is needed to distinguish different routing<br>(e.g. when there are several TCP connections of the same service routed to different DRBs) | |
| RoutingInfo | IP_RoutingTable_Type | |

### DRBMUX_COMMON_IND_CNF

| TTCN-3 Union Type | | |
|---|---|---|
| **Name** | **DRBMUX_COMMON_IND_CNF** | |
| **Comment** | | |
| Confirm | Null_Type | confirm DRBMUX_CONFIG_REQ |
| Error | Null_Type | indication of errors at the DRB-MUX:<br>An Error shall be raised by the DRB-MUX e.g. in the following cases:<br>- in DL when there are IP packets which cannot be routed to any DRB<br>i.e. the IP packet does not match to any entry in the routing table or the corresponding RB is not configured<br>- in DL when there are several DRBs possible for routing in the same cell |

### IPSEC_CONFIG_REQ

| TTCN-3 Union Type | | |
|---|---|---|
| **Name** | **IPSEC_CONFIG_REQ** | |
| **Comment** | | |
| Configure | IPsec_Configure_Type | |
| Release | IPsec_Release_Type | |

### IPSEC_CONFIG_CNF

| TTCN-3 Union Type | | |
|---|---|---|
| **Name** | **IPSEC_CONFIG_CNF** | |
| **Comment** | | |
| Confirm | Null_Type | confirm IPSEC_CONFIG_REQ |
| Error | Null_Type | to indicate invalid configuration of IPsec |

### IP_SOCKET_CTRL_REQ

| TTCN-3 Record Type | | | |
|---|---|---|---|
| **Name** | **IP_SOCKET_CTRL_REQ** | | |
| **Comment** | | | |
| ConnectionId | IP_Connection_Type | | |
| Req | IP_CtrlRequest_Type | | |

### IP_SOCKET_DATA_REQ

| TTCN-3 Record Type | | | |
|---|---|---|---|
| **Name** | **IP_SOCKET_DATA_REQ** | | |
| **Comment** | | | |
| ConnectionId | IP_Connection_Type | | |
| Req | IP_DataRequest_Type | | |

### IP_SOCKET_CTRL_IND

| TTCN-3 Record Type | | | |
|---|---|---|---|
| **Name** | **IP_SOCKET_CTRL_IND** | | |
| **Comment** | | | |
| ConnectionId | IP_Connection_Type | | |
| Ind | IP_CtrlIndication_Type | | |

### IP_SOCKET_DATA_IND

| TTCN-3 Record Type | | | |
|---|---|---|---|
| **Name** | **IP_SOCKET_DATA_IND** | | |
| **Comment** | | | |
| ConnectionId | IP_Connection_Type | | |
| Ind | IP_DataIndication_Type | | |

### IP_SOCKET_REQ

| TTCN-3 Union Type | | |
|---|---|---|
| **Name** | **IP_SOCKET_REQ** | |
| **Comment** | | |
| CTRL | IP_SOCKET_CTRL_REQ | |
| DATA | IP_SOCKET_DATA_REQ | |

### IP_SOCKET_IND

| TTCN-3 Union Type | | |
|---|---|---|
| **Name** | **IP_SOCKET_IND** | |
| **Comment** | | |
| CTRL | IP_SOCKET_CTRL_IND | |
| DATA | IP_SOCKET_DATA_IND | |

### IP_CONTROL_PORT

| TTCN-3 Port Type | | |
|---|---|---|
| **Name** | **IP_CONTROL_PORT** | |
| **Comment** | | |
| out | DRBMUX_CONFIG_REQ | |
| in | DRBMUX_COMMON_IND_CNF | |

### IPSEC_CONTROL_PORT

| TTCN-3 Port Type | | |
|---|---|---|
| **Name** | **IPSEC_CONTROL_PORT** | |
| **Comment** | | |
| out | IPSEC_CONFIG_REQ | |
| in | IPSEC_CONFIG_CNF | |

### IP_SOCKET_PORT

| TTCN-3 Port Type | | |
|---|---|---|
| **Name** | **IP_SOCKET_PORT** | |
| **Comment** | | |
| out | IP_SOCKET_REQ | |
| in | IP_SOCKET_IND | |

# D.6 NR_PDCP_TypeDefs

## D.6.1 NR_PDCP_Config_Parameters

Parameters defined in or related to NR ASN.1 type PDCP-Config

### NR_PDCP_SN_Size_Type

| TTCN-3 Enumerated Type | |
|---|---|
| **Name** | **NR_PDCP_SN_Size_Type** |
| **Comment** | PDCP Sequence Number |
| PDCP_SNLength12 | TS 38.323 clause 6.2.2.1 and clause 6.2.2.2 |
| PDCP_SNLength18 | TS 38.323 clause 6.2.2.3 |

### NR_PDCP_DRB_HeaderCompression_Type

| TTCN-3 Union Type | | |
|---|---|---|
| **Name** | **NR_PDCP_DRB_HeaderCompression_Type** | |
| **Comment** | place holder for header compression | |
| None | Null_Type | |

### NR_PDCP_DRB_Config_Parameters_Type

| TTCN-3 Record Type | | | |
|---|---|---|---|
| **Name** | **NR_PDCP_DRB_Config_Parameters_Type** | | |
| **Comment** | parameters corrsponding to NR ASN.1 PDCP-Config.drb;<br>the following parameter are not included and may be added if needed:<br>- integer DiscardTimer (timer value in milliseconds)<br>- boolean StatusReportRequired<br>- boolean OutOfOrderDelivery | | |
| SN_SizeUL | NR_PDCP_SN_Size_Type | | PDCP-Config.drb.pdcp-SN-SizeUL |
| SN_SizeDL | NR_PDCP_SN_Size_Type | | PDCP-Config.drb.pdcp-SN-SizeDL |
| HeaderCompression | NR_PDCP_DRB_HeaderCompression_Type | | PDCP-Config.drb.headerCompression |
| IntegrityProtectionEnabled | boolean | | PDCP-Config.drb.integrityProtection |

### NR_PDCP_RB_Config_Parameters_Type

| TTCN-3 Union Type | | |
|---|---|---|
| **Name** | **NR_PDCP_RB_Config_Parameters_Type** | |
| **Comment** | | |
| Srb | Null_Type | no SRB specific parameters in NR ASN.1 PDCP-Config |
| Drb | NR_PDCP_DRB_Config_Parameters_Type | DRB specific parameters corrsponding to NR ASN.1 PDCP-Config.drb |

**NR_PDCP_Config_Parameters_Type**

| TTCN-3 Record Type | | | |
|---|---|---|---|
| **Name** | **NR_PDCP_Config_Parameters_Type** | | |
| **Comment** | parameters corrsponding to NR ASN.1 PDCP-Config:<br>the following parameter are not included and may be added if needed:<br>- integer TReorderingTimer (timer value in milliseconds) | | |
| Rb | NR_PDCP_RB_Config_Parameters_Type | | |

## D.6.2 NR_PDCP_Configuration

**NR_PDCP_TransparentMode**

| TTCN-3 Record Type | | | |
|---|---|---|---|
| **Name** | **NR_PDCP_TransparentMode** | | |
| **Comment** | | | |
| SN_Size | NR_PDCP_SN_Size_Type | | |

**NR_PDCP_RbConfig_Type**

| TTCN-3 Union Type | | |
|---|---|---|
| **Name** | **NR_PDCP_RbConfig_Type** | |
| **Comment** | | |
| Params | NR_PDCP_Config_Parameters_Type | PDCP configuration parameters corresponding to UE configuration |
| TransparentMode | NR_PDCP_TransparentMode | PDCP configuration for transparent (test) mode:<br>used for PDCP tests (TS 38.523-3, cl. 5.1.2.1):<br>the SS does not apply ciphering, not apply integrity protection and<br>does not maintain PDCP sequence numbers and state variables;<br>ROHC is not not applied by the SS.<br>Note:<br>a reconfiguration of a RB from transparent mode to 'normal' mode is not foreseen<br>(i.e. there is no mechanism to restore Ciphering, PDCP sequence numbers and state variables at the SS)<br>(in UL PDCP PDUs are decoded depending on SN_Size) |

**NR_PDCP_RBTerminating_Type**

| TTCN-3 Record Type | | | |
|---|---|---|---|
| **Name** | **NR_PDCP_RBTerminating_Type** | | |
| **Comment** | RB terminating PDCP configuration: the PDCP may be linked<br>- to a local RLC bearer: RLC bearer is configured for the same cell<br>- to the RLC bearer of some other cell group: LinkToOtherCellGroup is not "None"<br>- the both (in case of split bearer): RLC bearer is configured for the same cell and LinkToOtherCellGroup is not "None" | | |
| RbConfig | NR_PDCP_RbConfig_Type | opt | mandatory for initial configuration; omit means "keep as it is" |
| LinkToOtherCellGroup | RlcBearerRouting_Type | opt | mandatory for initial configuration; omit means "keep as it is"<br>None: no link to other cell group (normal case, non-split bearer)<br>RAT/cellId: PDCP is linked to RLC bearer of another cell group (same or other RAT): split bearer or PDCP and RLC bearer being configured at different cells<br>NOTE: applicable also for PDCP split bearer test cases when PDCP is in transparent mode => test case body may be implemented at one PTC |

**NR_PDCP_Proxy_Type**

| TTCN-3 Record Type | | | |
|---|---|---|---|
| **Name** | **NR_PDCP_Proxy_Type** | | |
| **Comment** | proxy to route PDCP data between terminating PDCP entity and RLC bearer of another cell (group) | | |
| LinkToOtherNode | RlcBearerRouting_Type | | RAT/cellId to address the radio bearer terminating node (PDCP) (None is not applicable) |

**NR_PDCP_Configuration_Type**

| TTCN-3 Union Type | | |
|---|---|---|
| **Name** | **NR_PDCP_Configuration_Type** | |
| **Comment** | | |
| None | Null_Type | for SRB0 no PDCP is configured; furthermore the PDCP may not be configured e.g. for DRBs tested in RLC or MAC test cases |
| RBTerminating | NR_PDCP_RBTerminating_Type | PDCP entity at the terminating node: handling of PDCP protocol for the given bearer (normal or split beaerer) |
| Proxy | NR_PDCP_Proxy_Type | proxy to be configured above RLC instead of a normal PDCP entity when the RLC bearer is not in the same cell (group) as the terminating PDCP entity |

## D.6.3 NR_PDCP_DrbDefs

**NR_PDCP_DrbDefs: Basic Type Definitions**

| TTCN-3 Basic Types | | |
|---|---|---|
| **NR_PDCP_SDU_Type** | octetstring | |
| **NR_PDCP_CtrlPduType_Type** | B3_Type | PDU type according to TS 38.323 clause 6.3.8:<br>000 PDCP status report<br>001 Interspersed ROHC feedback<br>010 EHC feedback<br>011-111 Reserved |

### NR_PDCP_SDUList_Type

| TTCN-3 Record of Type | |
|---|---|
| **Name** | **NR_PDCP_SDUList_Type** |
| **Comment** | |
| record of NR_PDCP_SDU_Type | |

### NR_PDCP_DataPduSN12Bits_Type

| TTCN-3 Record Type | | | |
|---|---|---|---|
| **Name** | **NR_PDCP_DataPduSN12Bits_Type** | | |
| **Comment** | Data PDU for DRBs with 12 bits PDCP SN (TS 38.323, clause 6.2.2.2) | | |
| D_C | B1_Type | | 1 bit, '1'B for Data PDU |
| Reserved | B3_Type | | 3 bits reserved |
| SequenceNumber | B12_Type | | 12 bits sequence number |
| SDU | NR_PDCP_SDU_Type | | content (octetstring) |
| MAC_I | B32_Type | opt | message authentication code according to TS 38.323, clause 6.3.4;<br>MAC-I field is present only when the DRB is configured with integrity protection;<br>in this case it is up to TTCN to provide the valid MAC_I in DL and to check it in UL |

### NR_PDCP_DataPduSN18Bits_Type

| TTCN-3 Record Type | | | |
|---|---|---|---|
| **Name** | **NR_PDCP_DataPduSN18Bits_Type** | | |
| **Comment** | Data PDU for DRBs with 18 bits PDCP SN (TS 38.323, clause 6.2.2.3) | | |
| D_C | B1_Type | | 1 bit, '1'B for Data PDU |
| Reserved | B5_Type | | 5 bits reserved |
| SequenceNumber | B18_Type | | 18 bits sequence number |
| SDU | NR_PDCP_SDU_Type | | content (octetstring) |
| MAC_I | B32_Type | opt | message authentication code according to TS 38.323, clause 6.3.4;<br>MAC-I field is present only when the DRB is configured with integrity protection;<br>in this case it is up to TTCN to provide the valid MAC_I in DL and to check it in UL |

### NR_PDCP_CtrlPduStatus_Type

| TTCN-3 Record Type | | | |
|---|---|---|---|
| **Name** | **NR_PDCP_CtrlPduStatus_Type** | | |
| **Comment** | Control PDU for PDCP status report (TS 38.323, clause 6.2.3.1) | | |
| D_C | B1_Type | | 1 bit, '0'B for Ctrl PDU |
| PDU_Type | NR_PDCP_CtrlPduType_Type | | 3 bits, '000'B for PDCP status report |
| Reserved | B4_Type | | 4 bits reserved |
| FirstMissingCount | B32_Type | | 32 bits, TS 38.323, clause 6.3.9 FMC |
| Bitmap | octetstring | opt | Bitmap according to TS 38.323, clause 6.3.10 |

**NR_PDCP_CtrlPduRohcFeedback_Type**

| TTCN-3 Record Type | | | |
|---|---|---|---|
| **Name** | **NR_PDCP_CtrlPduRohcFeedback_Type** | | |
| **Comment** | Control PDU for Interspersed ROHC feedback (TS 38.323, clause 6.2.3.2) | | |
| D_C | B1_Type | | 1 bit, '0'B for Ctrl PDU |
| PDU_Type | NR_PDCP_CtrlPduType_Type | | 3 bits, '001'B for Interspersed ROHC feedback |
| Reserved | B4_Type | | 4 bits reserved |
| RohcFeedback | octetstring | | ROHC packet that is not associated with a PDCP SDU |

**NR_PDCP_PDU_Type**

| TTCN-3 Union Type | | |
|---|---|---|
| **Name** | **NR_PDCP_PDU_Type** | |
| **Comment** | | |
| DataPduSN12Bits | NR_PDCP_DataPduSN12Bits_Type | |
| DataPduSN18Bits | NR_PDCP_DataPduSN18Bits_Type | |
| CtrlPduStatus | NR_PDCP_CtrlPduStatus_Type | |
| CtrlPduRohcFeedback | NR_PDCP_CtrlPduRohcFeedback_Type | |

**NR_PDCP_PDUList_Type**

| TTCN-3 Record of Type | |
|---|---|
| **Name** | **NR_PDCP_PDUList_Type** |
| **Comment** | |
| record of NR_PDCP_PDU_Type | |

# D.7 SDAP_TypeDefs

## D.7.1 SDAP_Configuration

**SDAP_Header_Type**

| TTCN-3 Enumerated Type | |
|---|---|
| **Name** | **SDAP_Header_Type** |
| **Comment** | |
| Present | |
| Absent | |

**QFI_List_Type**

| TTCN-3 Record of Type | |
|---|---|
| **Name** | **QFI_List_Type** |
| **Comment** | |
| record of integer | |

### SdapConfig_Type

| TTCN-3 Record Type | | | |
|---|---|---|---|
| **Name** | **SdapConfig_Type** | | |
| **Comment** | | | |
| Pdu_SessionId | integer | | |
| Sdap_HeaderDL | SDAP_Header_Type | opt | mandatory for initial configuration; omit means "keep as it is" when set to 'Present', unless specifically triggered otherwise, the SS shall set the RDI and RQI fields to 0 |
| Sdap_HeaderUL | SDAP_Header_Type | opt | mandatory for initial configuration; omit means "keep as it is" |
| MappedQoS_Flows | QFI_List_Type | opt | mandatory for initial configuration; omit means "keep as it is" |

### SdapTransparentMode_Type

| TTCN-3 Record Type | | | |
|---|---|---|---|
| **Name** | **SdapTransparentMode_Type** | | |
| **Comment** | | | |
| Sdap_HeaderUL | SDAP_Header_Type | | Indicates to the SS if the UE has been configured to include SDAP UL header |

### SdapConfigInfo_Type

| TTCN-3 Union Type | | |
|---|---|---|
| **Name** | **SdapConfigInfo_Type** | |
| **Comment** | | |
| SdapConfig | SdapConfig_Type | SDAP configuration parameters for the DRB |
| TransparentMode | SdapTransparentMode_Type | SDAP configuration for transparent (test) mode, used for SDAP tests:<br>SS does not add any SDAP headers in DL and does not remove any SDAP headers in UL |

### SDAP_Configuration_Type

| TTCN-3 Union Type | | |
|---|---|---|
| **Name** | **SDAP_Configuration_Type** | |
| **Comment** | | |
| None | Null_Type | |
| Config | SdapConfigInfo_Type | |

## D.7.2 SDAP_DrbDefs

### SDAP_DrbDefs: Basic Type Definitions

| TTCN-3 Basic Types | | |
|---|---|---|
| **SDAP_SDU_Type** | octetstring | |

### SDAP_SDUList_Type

| TTCN-3 Record of Type | |
|---|---|
| **Name** | **SDAP_SDUList_Type** |
| **Comment** | |
| record of SDAP_SDU_Type | |

### SDAP_DL_PduHeader_Type

| TTCN-3 Record Type | | | |
|---|---|---|---|
| **Name** | **SDAP_DL_PduHeader_Type** | | |
| **Comment** | TS 37.324 Figure 6.2.2.2-1 | | |
| RDI | B1_Type | | TS 37.324 Figure 6.3.7: The RDI bit indicates whether QoS flow to DRB mapping rule should be updated<br>1 bit: '0'B No action<br>'1'B To store QoS flow to DRB mapping rule |
| RQI | B1_Type | | TS 37.324 clause 6.3.6: The RQI bit indicates whether NAS should be informed of the updated of SDF to QoS flow mapping rules<br>1 bit: '0'B No action<br>'1'B To inform NAS that RQI bit is set to 1 |
| QFI | B6_Type | | TS 37.324 clause 6.3.4: The QFI field indicates the ID of the QoS flow to which the SDAP SDU belongs |

### SDAP_UL_PduHeader_Type

| TTCN-3 Record Type | | | |
|---|---|---|---|
| **Name** | **SDAP_UL_PduHeader_Type** | | |
| **Comment** | TS 37.324 Figure 6.2.2.3-1 or 6.2.3-1 | | |
| DC | B1_Type | | TS 37.324 clause 6.3.3: The D/C bit indicates whether the SDAP PDU is an SDAP Data PDU or an SDAP Control PDU<br>1 bit: '0'B Control PDU<br>'1'B Data PDU |
| R | B1_Type | | TS 37.324 clause 6.3.5: Reserved. In this version of the specification reserved bits shall be set to 0. Reserved bits shall be ignored by the receiver |
| QFI | B6_Type | | QFI (UL) or PQFI (SL)<br>TS 37.324 clause 6.3.4: The QFI field indicates the ID of the QoS flow to which the SDAP SDU belongs, or<br>TS 37.324 clause 6.3.8: The PQFI field indicates the ID of the PC5 QoS flow to which the SDAP PDU belongs |

### SDAP_PDU_DL_Type

| TTCN-3 Record Type | | | |
|---|---|---|---|
| **Name** | **SDAP_PDU_DL_Type** | | |
| **Comment** | TS 37.324 clause 6.2.2 Data PDU | | |
| Header | SDAP_DL_PduHeader_Type | opt | present for DL Data PDU with SDAP header (clause 6.2.2.2), omitted for Data PDU without SDAP header (clause 6.2.2.1) |
| Data | SDAP_SDU_Type | | |

### SDAP_PDU_UL_Type

| TTCN-3 Record Type | | | |
|---|---|---|---|
| **Name** | **SDAP_PDU_UL_Type** | | |
| **Comment** | TS 37.324 clause 6.2.2 Data PDU or clause 6.2.3 End-Marker Control PDU | | |
| Header | SDAP_UL_PduHeader_Type | opt | present for: UL Data PDU in default DRB or UL Data PDU with SDAP header in a non-default DRB (clause 6.2.2.3) or End-Marker Control PDU (clause 6.2.3); omitted for UL Data PDU without SDAP header in a non-default DRB (clause 6.2.2.1) |
| Data | SDAP_SDU_Type | opt | present for UL Data PDU (clause 6.2.2.1 or 6.2.2.3), omitted for End-Marker Control PDU (clause 6.2.3) |

### SDAP_PDU_Type

| TTCN-3 Union Type | | |
|---|---|---|
| **Name** | **SDAP_PDU_Type** | |
| **Comment** | TS 37.324 clause 6.2.2 Data PDU or 6.2.3 End-Marker Control PDU | |
| DL | SDAP_PDU_DL_Type | Data PDU in DL |
| UL | SDAP_PDU_UL_Type | Data PDU in UL or End-Marker Control PDU |

### SDAP_PDUList_Type

| TTCN-3 Record of Type | |
|---|---|
| **Name** | **SDAP_PDUList_Type** |
| **Comment** | |
| record of SDAP_PDU_Type | |

## D.8 NR_ASP_VirtualNoiseDefs

ASP definitions for virtual noise generation in NR cells:
- A VNG instance, upon creation, is always associated with an already configured NR cell. This VNG instance therefore operates on the same frequency as the associated NR cell's frequency.
- A VNG instance generates AWGN (Additive white Gaussian noise):
  - Frequency domain: on the whole carrier bandwidth defined for the frequency of the associated NR cell.
  - Time domain: in every slot.
- The AWGN power level is defined as an EPRE in dBm/SCS, corresponding to the 'Noc' value provided in the test case prose.

### NR_ASP_VirtualNoiseDefs: Basic Type Definitions

| TTCN-3 Basic Types | | |
|---|---|---|
| **NR_VngConfigConfirm_Type** | Null_Type | |

### NR_VngConfigInfo_Type

| TTCN-3 Union Type | | |
|---|---|---|
| **Name** | **NR_VngConfigInfo_Type** | |
| **Comment** | | |
| CellNocLevel | integer | CellNocLevel - EPRE level in dBm/SCS for AWGN transmission to model a noise source.<br>The SS shall apply AWGN to the whole carrier bandwidth of the associated NR cell and in every slot |

### NR_VngConfigRequest_Type

| TTCN-3 Union Type | | |
|---|---|---|
| **Name** | **NR_VngConfigRequest_Type** | |
| **Comment** | configure/activate noise for a given cell;<br>NOTE: it is assumed the associated NR cell has been created beforehand | |
| Configure | NR_VngConfigInfo_Type | configuration of the virtual noise generator;<br>regardless of the power level the noise generator is off before it gets activated for this cell;<br>in case the configuration needs to be changed during a test, the noise generator shall be deactivated for this cell |
| Activate | Null_Type | noise is activated (switched on) for the given cell acc. to the previous configuration;<br>while being active the configuration shall not be modified |
| Deactivate | Null_Type | deactivate noise for given cell |

### NR_VNG_CTRL_REQ

| TTCN-3 Record Type | | | |
|---|---|---|---|
| **Name** | **NR_VNG_CTRL_REQ** | | |
| **Comment** | | | |
| Common | NR_ReqAspCommonPart_Type | | CellId : as for the associated NR cell<br>RoutingInfo : None<br>TimingInfo : Now<br>ControlInfo : CnfFlag:=true; FollowOnFlag:=false<br>RlcBearerRouting : None |
| Request | NR_VngConfigRequest_Type | | |

### NR_VNG_CTRL_CNF

| TTCN-3 Record Type | | | |
|---|---|---|---|
| **Name** | **NR_VNG_CTRL_CNF** | | |
| **Comment** | | | |
| Common | NR_CnfAspCommonPart_Type | | TimingInfo is ignored by TTCN<br>=> SS may set TimingInfo to "None" |
| Confirm | NR_VngConfigConfirm_Type | | |

### NR_VNG_PORT

| TTCN-3 Port Type | | |
|---|---|---|
| **Name** | **NR_VNG_PORT** | |
| **Comment** | NR BASE PTC: Port for virtual noise generator | |
| out | NR_VNG_CTRL_REQ | |
| in | NR_VNG_CTRL_CNF | |

# D.9 CommonDefs

### CommonDefs: Constant Definitions

| TTCN-3 Basic Types | | | |
|---|---|---|---|
| **tsc_UInt16Max** | integer | 65535 | |
| **tsc_UInt32Max** | integer | 4294967295 | |

## CommonDefs: Basic Type Definitions

| TTCN-3 Basic Types | | |
|---|---|---|
| **B1_Type** | bitstring length(1) | |
| **B2_Type** | bitstring length(2) | |
| **B3_Type** | bitstring length(3) | |
| **B4_Type** | bitstring length(4) | |
| **B5_Type** | bitstring length(5) | |
| **B6_Type** | bitstring length(6) | |
| **B7_Type** | bitstring length(7) | |
| **B8_Type** | bitstring length(8) | |
| **B12_Type** | bitstring length(12) | |
| **B14_Type** | bitstring length(14) | |
| **B16_Type** | bitstring length(16) | |
| **B18_Type** | bitstring length(18) | |
| **B32_Type** | bitstring length(32) | |
| **B48_Type** | bitstring length(48) | |
| **B128_Type** | bitstring length(128) | |
| **B128_Key_Type** | B128_Type | 128 bit security key |
| **O1_Type** | octetstring length(1) | |
| **Null_Type** | boolean (true) | dummy type for 'typeless' fields in unions |
| **UInt_Type** | integer (0 .. infinity) | |
| **UInt16_Type** | integer (0 .. tsc_UInt16Max) | |
| **UInt32_Type** | integer (0 .. tsc_UInt32Max) | |
| **IP_DrbId_Type** | integer | DRB identity type common for all RATs:<br>- for EUTRA it corresponds to the ASN.1 type DRB-Identity<br>- for UTRAN it corresponds to the ASN.1 type RB-Identity and values are as defined in TS 34.123-3 Table 8.2.4.1<br>- for GERAN the NSAPI value (type record NSAPI) may be used<br>NOTE: this is introduced to simplify the dependencies (i.e. to keep IP_ASP_TypeDefs independent from any RAT specific type definitions) |
| **PdcpCountValue_Type** | B32_Type | |
| **RNTI_Value_Type** | UInt16_Type | corresponds to NR ASN.1: RNTI-Value ::= INTEGER (0..65535) |
| **RNTI_B16_Type** | B16_Type | |

## B8_List_Type

| TTCN-3 Record of Type | |
|---|---|
| **Name** | **B8_List_Type** |
| **Comment** | |
| record of B8_Type | |

## IntegerList_Type

| TTCN-3 Record of Type | |
|---|---|
| **Name** | **IntegerList_Type** |
| **Comment** | |
| record of integer | |

### IndicationAndControlMode_Type

| TTCN-3 Enumerated Type | |
|---|---|
| **Name** | **IndicationAndControlMode_Type** |
| **Comment** | |
| enable | |
| disable | |

### NR_CellId_Type

| TTCN-3 Enumerated Type | |
|---|---|
| **Name** | **NR_CellId_Type** |
| **Comment** | |
| nr_Cell_NonSpecific | |
| nr_Cell1 | |
| nr_Cell2 | |
| nr_Cell3 | |
| nr_Cell4 | |
| nr_Cell6 | |
| nr_Cell10 | |
| nr_Cell11 | |
| nr_Cell12 | |
| nr_Cell13 | |
| nr_Cell14 | |
| nr_Cell23 | |
| nr_Cell28 | |
| nr_Cell29 | |
| nr_Cell30 | |
| nr_Cell31 | |

### NR_CellIdList_Type

| TTCN-3 Record of Type | |
|---|---|
| **Name** | **NR_CellIdList_Type** |
| **Comment** | NOTE: there seems to be no need for any length restriction |
| record of NR_CellId_Type | |

### EUTRA_CellId_Type

| TTCN-3 Enumerated Type | |
|---|---|
| **Name** | **EUTRA_CellId_Type** |
| **Comment** | |
| eutra_Cell_NonSpecific | |
| eutra_Cell1 | |
| eutra_Cell2 | |
| eutra_Cell3 | |
| eutra_Cell4 | |
| eutra_Cell6 | |
| eutra_Cell10 | |
| eutra_Cell11 | |
| eutra_Cell12 | |
| eutra_Cell13 | |
| eutra_Cell14 | |
| eutra_Cell23 | |
| eutra_Cell28 | |
| eutra_Cell29 | |
| eutra_Cell30 | |
| eutra_Cell31 | |
| eutra_CellA | |
| eutra_CellB | |
| eutra_CellC | |
| eutra_CellD | |
| eutra_CellE | |
| eutra_CellG | |
| eutra_CellH | |
| eutra_CellI | |
| eutra_CellJ | |
| eutra_CellK | |
| eutra_CellL | |
| eutra_CellM | |

### UE_NR_DeltaValues_Type

| TTCN-3 Record Type | | | |
|---|---|---|---|
| **Name** | **UE_NR_DeltaValues_Type** | | |
| **Comment** | | | |
| DeltaPrimaryBand | DeltaValues_Type | | |
| DeltaSecondaryBand | DeltaValues_Type | | |

### DeltaValues_Type

| TTCN-3 Record Type | | | |
|---|---|---|---|
| **Name** | **DeltaValues_Type** | | |
| **Comment** | Delta value for each frequency, by default for FR1 or when the frequency is not available the Delta value is set to 0. | | |
| DeltaNRf1 | integer | | |
| DeltaNRf2 | integer | | |
| DeltaNRf3 | integer | | |
| DeltaNRf4 | integer | | |

### IP_EUTRA_DrbInfo_Type

| TTCN-3 Record Type | | | |
|---|---|---|---|
| **Name** | **IP_EUTRA_DrbInfo_Type** | | |
| **Comment** | | | |
| CellId | EUTRA_CellId_Type | | data is routed to a specific cell regardless of whether the same DRB is configured in any other cell |
| DrbId | IP_DrbId_Type | opt | mandatory at the system interface |

### IP_UTRAN_GERAN_DrbInfo_Type

| TTCN-3 Record Type | | | |
|---|---|---|---|
| **Name** | **IP_UTRAN_GERAN_DrbInfo_Type** | | |
| **Comment** | | | |
| CellId | integer | | |
| DrbId | IP_DrbId_Type | opt | mandatory at the system interface |

### IP_WLAN_DrbInfo_Type

| TTCN-3 Record Type | | | |
|---|---|---|---|
| **Name** | **IP_WLAN_DrbInfo_Type** | | |
| **Comment** | | | |
| CellId | integer | | |

### IP_ePDG_IPsecTunnelInfo_Type

| TTCN-3 Record Type | | | |
|---|---|---|---|
| **Name** | **IP_ePDG_IPsecTunnelInfo_Type** | | |
| **Comment** | | | |
| PdnId | PDN_Index_Type | | 'index name' of PDN associated to the IPsec tunnel, e.g. for SS to distinguish routing of IP packets in case of more than one IPsec tunnel<br>NOTE: In general only 'ePDG_XXX' values shall be used |

### QosFlow_Identification_Type

| TTCN-3 Record Type | | | |
|---|---|---|---|
| **Name** | **QosFlow_Identification_Type** | | |
| **Comment** | | | |
| PDU_SessionId | integer | | TS 24.007 clause 11.2.3.1b |
| QFI | integer | | TS 24.501 Table 11.2.3.1c.1 |

### IP_NR_QosFlowInfo_Type

| TTCN-3 Record Type | | | |
|---|---|---|---|
| **Name** | **IP_NR_QosFlowInfo_Type** | | |
| **Comment** | | | |
| CellId | NR_CellId_Type | | data is routed to a specific cell regardless of whether the same DRB is configured in any other cell |
| QosFlow | QosFlow_Identification_Type | opt | mandatory at the system interface |

### IP_EUTRA_QosFlowInfo_Type

| TTCN-3 Record Type | | | |
|---|---|---|---|
| **Name** | **IP_EUTRA_QosFlowInfo_Type** | | |
| **Comment** | | | |
| CellId | EUTRA_CellId_Type | | data is routed to a specific cell regardless of whether the same DRB is configured in any other cell |
| QosFlow | QosFlow_Identification_Type | opt | mandatory at the system interface |

### IP_NR_DrbInfo_Type

| TTCN-3 Record Type | | | |
|---|---|---|---|
| **Name** | **IP_NR_DrbInfo_Type** | | |
| **Comment** | | | |
| CellId | NR_CellId_Type | | |
| DrbId | IP_DrbId_Type | opt | mandatory at the system interface |

### IP_DrbInfo_Type

| TTCN-3 Union Type | | |
|---|---|---|
| **Name** | **IP_DrbInfo_Type** | |
| **Comment** | | |
| Eutra | IP_EUTRA_DrbInfo_Type | |
| Eutra5GC | IP_EUTRA_QosFlowInfo_Type | used when SDAP is configured in non-transparent mode at the SS |
| Utran | IP_UTRAN_GERAN_DrbInfo_Type | |
| Geran | IP_UTRAN_GERAN_DrbInfo_Type | |
| Nr5GC | IP_NR_QosFlowInfo_Type | used when SDAP is configured in non-transparent mode at the SS |
| NrEPC | IP_NR_DrbInfo_Type | used when NR is connected to EPC (S1-U interface) or when SDAP is configured in transparent mode at the SS |
| Wlan | IP_WLAN_DrbInfo_Type | |
| IPsecTunnel | IP_ePDG_IPsecTunnelInfo_Type | |
| MCX_IP | Null_Type | !!!! TO BE REMOVED !!!! |

**PDN_Index_Type**

| TTCN-3 Enumerated Type | |
|---|---|
| **Name** | **PDN_Index_Type** |
| **Comment** | 'index name' associated to a PDN:<br>The major purpose is to associate a PDN specific set of IP addresses to the given PDN (e.g. UE addresses, P-CSCF address etc.);<br>in general there are one or two PDNs configured at the same time and - from TTCN point of view - the IMS PDN is considered to be the first one;<br>a second PDN may be configured in case of emergency call or e.g. for XCAP signalling;<br>the 'internet PDN' (according to TS 36.508 clause 4.5.2) is considered as (optional) second PDN during initial registration and gets released after initial registration;<br>in case of WLAN a separate group of index names is used to distinguish the different configuration of the emulated IP network |
| PDN_1 | "default" PDN being kept connected to during a test case (in case of LTE in general the IMS PDN) |
| PDN_2 | second PDN: during initial registration (TS 36.508 clause 4.5.2) for LTE and "multiple PDN' this is the internet PDN;<br>after initial registration it is used if needed according to the test purpose (e.g. emergency call) |
| PDN_2a | used for the special case when the UE IP address of the second PDN changes in a test case |
| PDN_Internet | mainly used as alias for PDN2 during initial registration |
| ePDG_IMS1 | WLAN: PDN for 'normal' IMS |
| ePDG_IMS2 | WLAN: PDN for emergency IMS (in general) |
| ePDG_XCAP | WLAN: PDN for XCAP in case of XCAP server being part of 3GPP-network<br>NOTE: In contrast to LTE for WLAN there is a different IP architecture to be consider by TTCN for XCAP and IMS emergency |
| ePDG_Internet | place-holder for WLAN-offload scenarios |
| nrPDN_Internet | mainly used as alias during initial registration in ENDC |
| PDN_3 | used in ENDC and 5GC for the third PDN |

# D.10 CommonAspDefs

## D.10.1 Cell_Configuration_Common

**CellTimingInfo_Type**

| TTCN-3 Record Type | | | |
|---|---|---|---|
| **Name** | **CellTimingInfo_Type** | | |
| **Comment** | Cell Timing | | |
| TcOffset | integer (0..63) | opt | For NR according to TS 38.211 clause 4.1 Ts/Tc = 64 with Tc = 1/(480000 * 4096) and Ts = 1/(15000 * 2048) as for EUTRA;<br>=> for NR to specify granularity per Tc; for EUTRA to be set to 0 (and/or to be ignored by the SS) |
| Tcell | integer (0..307199) | | frame duration Tf = 307200 * Ts = 10ms; System Time Unit Ts = 1/(15000 * 2048) |
| SfnOffset | integer (0..1023) | | |
| HsfnOffset | integer (0..1023) | | |

## D.10.2 MAC_Layer

### ULGrant_Period_Type

| TTCN-3 Union Type | | |
|---|---|---|
| **Name** | **ULGrant_Period_Type** | |
| **Comment** | | |
| OnlyOnce | Null_Type | grant is sent out only once; no period |
| Duration | integer (1..infinity) | duration of the grant period in number of sub-frames (1ms) for EUTRA and number of slots for NR |

### TransmissionRepetition_Type

| TTCN-3 Union Type | | |
|---|---|---|
| **Name** | **TransmissionRepetition_Type** | |
| **Comment** | | |
| Continuous | Null_Type | |
| NumOfCycles | integer (1..infinity) | |

### PeriodicGrant_Type

| TTCN-3 Record Type | | | |
|---|---|---|---|
| **Name** | **PeriodicGrant_Type** | | |
| **Comment** | | | |
| Period | ULGrant_Period_Type | | time period after which UL Grant need to be automatically transmitted or 'OnlyOnce' |
| NoOfRepetitions | TransmissionRepetition_Type | | number of UL Grant repetitions to be automatically transmitted or continuous repetition |

### UL_GrantConfig_Type

| TTCN-3 Union Type | | |
|---|---|---|
| **Name** | **UL_GrantConfig_Type** | |
| **Comment** | | |
| OnSR_Reception | Null_Type | SS transmits UL Grant as configured by DciInfoUL_Type at every reception of SR;<br>to be used in non L2 Test |
| Periodic | PeriodicGrant_Type | SS transmits UL Grant as configured by DciInfoUL_Type periodically;<br>to be used in L2 tests;<br>MAC tests testing Grants might set the period as infinite and num grant as 1 |
| PeriodicOnSR_Reception | PeriodicGrant_Type | SS transmits UL Grant as configured by DciInfoUL_Type periodically; the periodic grant transmission<br>is started/restarted on reception of a SR from UE<br>to be used in non L2 Test to enable large UL data transmission for lower category UEs (Cat<=1) |
| None | Null_Type | disable any grant transmission |

**RAR_RapIdCtrl_Type**

| TTCN-3 Union Type | | |
|---|---|---|
| **Name** | **RAR_RapIdCtrl_Type** | |
| **Comment** | | |
| Automatic | Null_Type | SS shall automatically use same RAPID as received from the UE |
| Unmatched | Null_Type | SS shall use RAPID being different from preamble sent by the UE;<br>SS shall calculate this RAPID acc. to RAPID := (RAPID + 3..63) mod 64<br>if single RAR is transmitted in a MAC PDU then only 3 is added<br>if multiple RAR's are transmitted in MAC PDU, then for first unmatched RAR 3 is added, second unmatched 4 is added, third unmatched 5 is added and so on |

# D.10.3 System_Indications

**HARQ_Type**

| TTCN-3 Enumerated Type | |
|---|---|
| **Name** | **HARQ_Type** |
| **Comment** | ack represents HARQ ACK; nack represents HARQ NACK |
| ack | |
| nack | |

# D.10.4 ASP_CommonPart

Definition of ASP common parts for REQ-, CNF- and IND-ASPs

## D.10.4.1 ASP_CommonPart_Definitions

### D.10.4.1.1 Routing_Info

**CommonAspDefs: Constant Definitions**

| TTCN-3 Basic Types | | | |
|---|---|---|---|
| **tsc_SRB0** | integer | 0 | |
| **tsc_SRB1** | integer | 1 | |
| **tsc_SRB2** | integer | 2 | |
| **tsc_SRB3** | integer | 3 | |
| **tsc_SRB4** | integer | 4 | |

**Routing_Info: Basic Type Definitions**

| TTCN-3 Basic Types | | |
|---|---|---|
| **SRB_Identity_Type** | integer (tsc_SRB0, tsc_SRB1, tsc_SRB2, tsc_SRB3, tsc_SRB4) | |

**RlcBearerRouting_Type**

| TTCN-3 Union Type | | |
|---|---|---|
| **Name** | **RlcBearerRouting_Type** | |
| **Comment** | data routing e.g. in case of split bearer (split DRB or split SRB);<br>applicable for multi-RAT Dual Connectivity (MR-DC) as well as single-RAT Dual Connectivity | |
| EUTRA | EUTRA_CellId_Type | |
| NR | NR_CellId_Type | |
| None | Null_Type | normal case: PDCP and RLC are configured at the same cell |

### D.10.4.1.2 Timing_Info

**Timing_Info: Basic Type Definitions**

| TTCN-3 Basic Types | | |
|---|---|---|
| **SystemFrameNumber_Type** | integer (0..1023) | |
| **SubFrameNumber_Type** | integer (0..9) | |
| **HyperSystemFrameNumberInfo_Type** | SystemFrameNumberInfo_Type | |

**SubFrameInfo_Type**

| TTCN-3 Union Type | | |
|---|---|---|
| **Name** | **SubFrameInfo_Type** | |
| **Comment** | | |
| Number | SubFrameNumber_Type | |
| Any | Null_Type | no specific sub-frame (valid for REQ ASPs only) |

**SystemFrameNumberInfo_Type**

| TTCN-3 Union Type | | |
|---|---|---|
| **Name** | **SystemFrameNumberInfo_Type** | |
| **Comment** | | |
| Number | SystemFrameNumber_Type | |
| Any | Null_Type | no specific frame number (valid for REQ ASPs only) |

**SlotOffset_Type**

| TTCN-3 Union Type | | |
|---|---|---|
| **Name** | **SlotOffset_Type** | |
| **Comment** | slots per subframe according to TS 38.211 Table 4.3.2-1 | |
| Numerology0 | Null_Type | mu=0; only one slot per subframe |
| Numerology1 | integer (0..1) | mu=1; 2 slots per subframe |
| Numerology2 | integer (0..3) | mu=2; 4 slots per subframe |
| Numerology3 | integer (0..7) | mu=3; 8 slots per subframe |
| Numerology4 | integer (0..15) | mu=4; 16 slots per subframe |

### SlotTimingInfo_Type

| TTCN-3 Union Type | | |
|---|---|---|
| **Name** | **SlotTimingInfo_Type** | |
| **Comment** | EUTRA, NBIOT:<br>REQ ASPs: TTCN shall set the SlotTimingInfo to "FirstSlot" for EUTRA, NBIOT addressing the whole subframe<br>IND ASPs: TTCN shall ignore the SlotTimingInfo sent by the SS for EUTRA, NBIOT<br>NR:<br>REQ ASPs: Any:=true only if the slot number is not relevant,<br>in which case the SS may choose the next available slot of the given subframe<br>IND ASPs: Any:=true only if there is no slot information available for the particular kind of indication | |
| SlotOffset | SlotOffset_Type | to address a particular slot in a subframe |
| FirstSlot | Null_Type | to address the first slot independent from the numerology (REQ ASPs only) or for REQ ASPs in EUTRA and NBIOT |
| Any | Null_Type | for IND ASPs in EUTRA and NBIOT or if slot number is not relevant or not available |

### SubFrameTiming_Type

| TTCN-3 Record Type | | | |
|---|---|---|---|
| **Name** | **SubFrameTiming_Type** | | |
| **Comment** | | | |
| SFN | SystemFrameNumberInfo_Type | | |
| Subframe | SubFrameInfo_Type | | |
| HSFN | HyperSystemFrameNumberInfo_Type | | |
| Slot | SlotTimingInfo_Type | | |

### TimingInfo_Type

| TTCN-3 Union Type | | |
|---|---|---|
| **Name** | **TimingInfo_Type** | |
| **Comment** | | |
| SubFrame | SubFrameTiming_Type | |
| Now | Null_Type | to be used in REQ ASPs when there is no 'activation time' |
| None | Null_Type | only to be used in SYSTEM_CTRL_CNF or NR_SYSTEM_CTRL_CNF but not for EnquireTiming |

## D.10.4.2 REQ_ASP_CommonPart

**ReqAspControlInfo_Type**

| TTCN-3 Record Type | | | |
|---|---|---|---|
| **Name** | **ReqAspControlInfo_Type** | | |
| **Comment** | | | |
| CnfFlag | boolean | | true => SS shall send CNF:<br>when the REQ is with no timing information (no activation time), SS shall send the confirmation when the configuration is done, i.e. when the test case may continue.<br>Example:<br>when there is a configuration followed by a send event it shall not be necessary to have a wait timer in between but the CNF triggers the send event.<br>If there are other triggers e.g. like the UE sending a message, CnfFlag shall be set to false by the test case to avoid racing conditions with the CNF and the signalling message.<br>When there is an activation time SS shall send the CNF after the configuration has been scheduled;<br>that means SS shall not wait until the activation time has been expired.<br>When FollowOnFlag is true, CnfFlag shall be set to false. |
| FollowOnFlag | boolean | | false => no further (related) information<br>true: further related information will be sent to SS (semantics depending on respective ASP) |

## D.10.4.3 CNF_ASP_CommonPart

**ConfirmationResult_Type**

| TTCN-3 Union Type | | |
|---|---|---|
| **Name** | **ConfirmationResult_Type** | |
| **Comment** | | |
| Success | Null_Type | |
| Error | integer | may contain SS specific error code; this will not be evaluated by TTCN |

## D.10.4.4 IND_ASP_CommonPart

**IntegrityErrorIndication_Type**

| TTCN-3 Record Type | | | |
|---|---|---|---|
| **Name** | **IntegrityErrorIndication_Type** | | |
| **Comment** | | | |
| Nas | boolean | | NAS Integrity: set to true when received MAC does not match calculated MAC |
| Pdcp | boolean | | PDCP Integrity: set to true when received MAC does not match calculated MAC |

**ErrorIndication_Type**

| TTCN-3 Record Type | | | |
|---|---|---|---|
| **Name** | **ErrorIndication_Type** | | |
| **Comment** | | | |
| Integrity | IntegrityErrorIndication_Type | | Integrity error: received MAC does not match calculated MAC |
| System | integer | | any other error: may be SS specific error code; this will not be evaluated by TTCN;<br>e.g. an error shall be raised when the UE requests retransmission of an RLC PDU |

**IndicationStatus_Type**

| TTCN-3 Union Type | | |
|---|---|---|
| **Name** | **IndicationStatus_Type** | |
| **Comment** | | |
| Ok | Null_Type | |
| Error | ErrorIndication_Type | |

# D.11 References to TTCN-3

| References to TTCN-3 | | |
|---|---|---|
| **NR_ASP_TypeDefs** | NR_Defs/NR_ASP_TypeDefs.ttcn | Rev 29378 |
| **NR_ASP_DrbDefs** | NR_Defs/NR_ASP_DrbDefs.ttcn | Rev 29378 |
| **NR_ASP_SrbDefs** | NR_Defs/NR_ASP_SrbDefs.ttcn | Rev 29378 |
| **NR_CommonDefs** | NR_Defs/NR_CommonDefs.ttcn | Rev 29105 |
| **IP_ASP_TypeDefs** | IP_PTC/IP_ASP_TypeDefs.ttcn | Rev 27511 |
| **NR_PDCP_TypeDefs** | Common4G5G/NR_PDCP_TypeDefs.ttcn | Rev 29170 |
| **SDAP_TypeDefs** | Common4G5G/SDAP_TypeDefs.ttcn | Rev 29170 |
| **NR_ASP_VirtualNoiseDefs** | NR_Defs/NR_ASP_VirtualNoiseDefs.ttcn | Rev 25925 |
| **CommonDefs** | Common/CommonDefs.ttcn | Rev 29315 |
| **CommonAspDefs** | Common/CommonAspDefs.ttcn | Rev 29378 |

# Annex E (informative): Change history

| Change history | | | | | | | |
|---|---|---|---|---|---|---|---|
| **Date** | **Meeting** | **TDoc** | **CR** | **Rev** | **Cat** | **Subject/Comment** | **New version** |
| 2017-08 | R5#76 | R5-174121 | - | - | - | Introduction of TS 38.523-3. | 0.0.1 |
| 2018-03 | R5#78 | R5-180678 | - | - | - | Initial Test Model aspects | 0.1.0 |
| 2018-04 | R5#2-5G-NR | R5-182072 | - | - | - | EN-DC: Addition of Test Model aspects | 0.2.0 |
| 2018-05 | R5#79 | R5-183237 | - | - | - | EN-DC: Test Model updates | 1.0.0 |
| 2018-06 | RAN#80 | RP-181212 | - | - | - | put under revision control as v15.0.0 with small editorial changes | 15.0.0 |
| 2018-09 | RAN#81 | R5-184333 | 0002 | - | F | Updates to Annex B | 15.1.0 |
| 2018-09 | RAN#81 | R5-184696 | 0003 | - | F | EN-DC Test Model: Addition of further aspects | 15.1.0 |
| 2018-09 | RAN#81 | R5-185172 | 0001 | 2 | F | EN-DC: Test Model updates | 15.1.0 |
| 2018-09 | RAN#81 | R5s180525 / RP-181987 | 0005 | - | F | Add updated ASP definitions to 38.523-3 (prose), Annex D | 15.1.0 |
| 2018-12 | RAN#82 | R5-186727 | 0011 | - | F | Default NR TBS Tables for SIG test cases | 15.2.0 |
| 2018-12 | RAN#82 | R5-186729 | 0013 | - | F | EN-DC: Misc. Test Model updates | 15.2.0 |
| 2018-12 | RAN#82 | R5-188105 | 0010 | 1 | F | EN-DC test model handling of different types of bearers | 15.2.0 |
| 2018-12 | RAN#82 | R5-188106 | 0012 | 1 | F | SA Option2: Initial Test Model aspects | 15.2.0 |
| 2018-12 | RAN#82 | R5s180636/ RP-182298 | 0014 | - | F | Add updated ASP definitions to 38.523-3 (prose), Annex D | 15.2.0 |
| 2019-03 | RAN#83 | R5-191204 | 0028 | - | F | Common aspects: Test Model updates | 15.3.0 |
| 2019-03 | RAN#83 | R5-191206 | 0030 | - | F | EN-DC: Test Model updates | 15.3.0 |
| 2019-03 | RAN#83 | R5-192812 | 0029 | 1 | F | NR/5GC: Test Model updates | 15.3.0 |
| 2019-03 | RAN#83 | R5-192858 | 0031 | 2 | F | Common aspects: Updates to NR TBS handling | 15.3.0 |
| 2019-03 | RAN#83 | R5s190019 | 0022 | - | B | Addition of EN-DC RRC test case 8.2.3.1.1 in FR1 | 15.3.0 |
| 2019-03 | RAN#83 | R5s190024 | 0023 | - | B | Addition of EN-DC RRC test case 8.2.5.2.1 in FR2 path | 15.3.0 |
| 2019-03 | RAN#83 | R5s190027 | 0024 | - | B | Addition of EN-DC RRC test case 8.2.5.4.1 in FR1 | 15.3.0 |
| 2019-03 | RAN#83 | R5s190029 | 0025 | - | B | Addition of EN-DC RRC test case 8.2.5.2.1 in FR1 | 15.3.0 |
| 2019-03 | RAN#83 | R5s190033 | 0026 | - | F | Rel-15 Dec'18 partial baseline upgrade for 5GS TTCN-3 Test Suites | 15.3.0 |
| 2019-03 | RAN#83 | R5s190051 | 0027 | - | F | Corrections for Initialisation of NR ENDC component | 15.3.0 |
| 2019-03 | RAN#83 | R5s190060 | 0032 | - | B | Addition of EN-DC RRC test case 8.2.3.5.1 in FR1 path | 15.3.0 |
| 2019-03 | RAN#83 | R5s190062 | 0033 | - | B | Addition of EN-DC RRC test case 8.2.3.4.1 in FR1 path | 15.3.0 |
| 2019-03 | RAN#83 | R5s190064 | 0034 | - | F | Common Corrections to ENDC testcases | 15.3.0 |
| 2019-03 | RAN#83 | R5s190065 | 0035 | - | F | correction to ENDC test case 10.2.1.2 | 15.3.0 |
| 2019-03 | RAN#83 | R5s190067 | 0037 | - | B | Addition of EN-DC RRC test case 8.2.3.12.1 in FR1 path | 15.3.0 |
| 2019-03 | RAN#83 | R5s190069 | 0038 | - | F | Correction to ENDC RRC testcase 8.2.3.1.1 | 15.3.0 |
| 2019-03 | RAN#83 | R5s190086 | 0015 | 1 | B | Addition of EN-DC NAS test case 10.2.1.2 | 15.3.0 |
| 2019-03 | RAN#83 | R5s190087 | 0016 | 1 | B | Addition of EN-DC NAS test case 10.2.1.1 | 15.3.0 |
| 2019-03 | RAN#83 | R5s190088 | 0017 | 1 | B | Addition of EN-DC RRC test case 8.2.5.4.1 in FR2 path | 15.3.0 |
| 2019-03 | RAN#83 | R5s190124/ RP-190106 | 0054 | - | F | Add new verified and e-mail agreed TTCN test cases in the TC lists in 38.523-3 (prose), Annex A | 15.3.0 |
| 2019-06 | RAN#84 | R5-193993 | 0095 | - | F | NR: TBS updates | 15.4.0 |
| 2019-06 | RAN#84 | R5-193994 | 0096 | - | F | NR: Default UL Grants | 15.4.0 |
| 2019-06 | RAN#84 | R5-195240 | 0097 | 1 | F | Intra-NR mobility in RRC_CONNECTED | 15.4.0 |
| 2019-06 | RAN#84 | R5-195241 | 0098 | 1 | F | NR/5GC: Test Model updates | 15.4.0 |
| 2019-06 | RAN#84 | R5-195373 | 0103 | 1 | F | Handling of signalled absolute threshold values for OTA | 15.4.0 |
| 2019-06 | RAN#84 | R5s190150 | 0060 | - | F | NR/5GC: Re-verification of 5GC NAS test case 9.1.6.1.1 | 15.4.0 |
| 2019-06 | RAN#84 | R5s190155 | 0061 | - | B | Addition of EN-DC RRC test case 8.2.3.6.1 in FR1 path | 15.4.0 |
| 2019-06 | RAN#84 | R5s190157 | 0062 | - | B | Addition of EN-DC RRC test case 8.2.3.7.1 in FR1 path | 15.4.0 |
| 2019-06 | RAN#84 | R5s190161 | 0063 | - | B | Addition of EN-DC RRC test case 8.2.2.9.1 in FR1 path | 15.4.0 |
| 2019-06 | RAN#84 | R5s190163 | 0064 | - | B | Addition of EN-DC RLC test case 7.1.2.2.1 in FR1 | 15.4.0 |
| 2019-06 | RAN#84 | R5s190165 | 0065 | - | B | Addition of EN-DC RLC test case 7.1.2.2.2 in FR1 | 15.4.0 |
| 2019-06 | RAN#84 | R5s190168 | 0066 | - | F | Correction for EN-DC test cases | 15.4.0 |
| 2019-06 | RAN#84 | R5s190169 | 0067 | - | B | Addition of EN-DC RRC test case 8.2.3.8.1 in FR1 path | 15.4.0 |
| 2019-06 | RAN#84 | R5s190177 | 0068 | - | F | Correction of EN-DC RRC test case 8.2.5.1.1 | 15.4.0 |
| 2019-06 | RAN#84 | R5s190178 | 0069 | - | F | Correction to EN-DC RRC test cases 8.2.3.1.1 and 8.2.3.12.1 | 15.4.0 |
| 2019-06 | RAN#84 | R5s190179 | 0070 | - | B | Addition of EN-DC RRC test case 8.2.5.3.1 in FR1 | 15.4.0 |
| 2019-06 | RAN#84 | R5s190181 | 0071 | - | B | Addition of EN-DC RRC test case 8.2.5.3.1 in FR2 | 15.4.0 |
| 2019-06 | RAN#84 | R5s190188 | 0072 | - | F | Correction to EN-DC RRC test cases 8.2.2.4.1 and 8.2.2.5.1 | 15.4.0 |
| 2019-06 | RAN#84 | R5s190192 | 0073 | - | B | Addition of EN-DC RRC test cases 8.2.1.1.1 in FR1 path | 15.4.0 |

| | | | | | | | |
|---|---|---|---|---|---|---|---|
| 2019-06 | RAN#84 | R5s190194 | 0074 | - | B | Addition of EN-DC RRC test case 8.2.1.1.1 in FR2 path | 15.4.0 |
| 2019-06 | RAN#84 | R5s190196 | 0075 | - | B | Addition of EN-DC RRC test case 8.2.2.9.1 in FR2 path | 15.4.0 |
| 2019-06 | RAN#84 | R5s190198 | 0076 | - | B | Addition of NR5GC RRC test case 8.1.3.1.1 in FR1 path | 15.4.0 |
| 2019-06 | RAN#84 | R5s190200 | 0077 | - | F | Correction to EN-DC RRC test cases 8.2.3.4.1 and 8.2.3.5.1 | 15.4.0 |
| 2019-06 | RAN#84 | R5s190205 | 0079 | - | B | NR5GC : Addition of 5GMM test case 9.1.2.1 | 15.4.0 |
| 2019-06 | RAN#84 | R5s190207 | 0080 | - | B | NR5GC : Addition of 5GMM test case 9.1.5.2.2 | 15.4.0 |
| 2019-06 | RAN#84 | R5s190209 | 0081 | - | B | NR5GC FR1 : Addition of RRC test case 8.1.1.2.1 | 15.4.0 |
| 2019-06 | RAN#84 | R5s190214 | 0082 | - | B | NR5GC FR1 : Addition of RRC test case 8.1.1.1.1 | 15.4.0 |
| 2019-06 | RAN#84 | R5s190216 | 0083 | - | B | Addition of EN-DC RLC test case 7.1.2.3.1 in FR1 | 15.4.0 |
| 2019-06 | RAN#84 | R5s190219 | 0084 | - | F | Correction to cas_NR_DRB_COMMON_REQ_DataPerSlot | 15.4.0 |
| 2019-06 | RAN#84 | R5s190223 | 0086 | - | B | NR5GC : Addition of 5GMM test case 9.1.5.2.4 | 15.4.0 |
| 2019-06 | RAN#84 | R5s190236 | 0094 | - | B | Addition of EN-DC RLC test case 7.1.2.2.2 in FR2 | 15.4.0 |
| 2019-06 | RAN#84 | R5s190244 | 0100 | - | F | ENDC : Correction for RRC test case 8.2.5.2.1 | 15.4.0 |
| 2019-06 | RAN#84 | R5s190245 | 0101 | - | F | Correction for EN-DC test cases | 15.4.0 |
| 2019-06 | RAN#84 | R5s190260 | 0040 | 1 | B | Addition of EN-DC RRC test case 8.2.5.1.1 in FR2 | 15.4.0 |
| 2019-06 | RAN#84 | R5s190261 | 0041 | 1 | F | Correction for Rel-15 EN-DC ESM test case 10.2.1.1. | 15.4.0 |
| 2019-06 | RAN#84 | R5s190268 | 0046 | 1 | F | Correction to f_NR_ENDC_PreambleOnEUTRA | 15.4.0 |
| 2019-06 | RAN#84 | R5s190269 | 0047 | 1 | F | Correction to f_EUTRA38_ENDC_GetDRBIdOfMCG | 15.4.0 |
| 2019-06 | RAN#84 | R5s190270 | 0048 | 1 | F | Correction to cs_NR_CellConfigPhysicalLayerUplink | 15.4.0 |
| 2019-06 | RAN#84 | R5s190271 | 0049 | 1 | F | Correction to f_NR_SendRRCReconfigurationContentsToEUTRA | 15.4.0 |
| 2019-06 | RAN#84 | R5s190272 | 0051 | 1 | B | Addition of EN-DC RRC test case 8.2.2.4.1 in FR1 path | 15.4.0 |
| 2019-06 | RAN#84 | R5s190273 | 0052 | 1 | B | Addition of EN-DC RRC test case 8.2.2.5.1 in FR1 path | 15.4.0 |
| 2019-06 | RAN#84 | R5s190274 | 0053 | 1 | F | Correction to EN-DC TC 10.2.1.1 | 15.4.0 |
| 2019-06 | RAN#84 | R5s190278 | 0057 | 1 | B | Addition of EN-DC RRC test case 8.2.2.5.1 in FR2 path | 15.4.0 |
| 2019-06 | RAN#84 | R5s190279 | 0059 | 1 | B | Addition of EN-DC RRC test case 8.2.5.1.1 in FR1 | 15.4.0 |
| 2019-06 | RAN#84 | R5s190296 | 0043 | 1 | B | Addition of EN-DC RRC test case 8.2.3.3.1 in FR1 path | 15.4.0 |
| 2019-06 | RAN#84 | R5s190297 | 0044 | 1 | B | Addition of NR5GC NAS test case 9.1.6.1.1 | 15.4.0 |
| 2019-06 | RAN#84 | R5s190300 | 0055 | 1 | F | Correction to EN-DC RRC testcase 8.2.3.1.1 | 15.4.0 |
| 2019-06 | RAN#84 | R5s190301 | 0056 | 1 | B | Addition of EN-DC RRC test case 8.2.2.4.1 in FR2 path | 15.4.0 |
| 2019-06 | RAN#84 | R5s190303 | 0058 | 1 | F | Correction to checking of SINR reporting in Measurement Report in 5G EN-DC RRC test cases | 15.4.0 |
| 2019-06 | RAN#84 | R5s190311 | 0050 | 1 | F | Correction to EN-DC RRC test case 8.2.3.5.1 | 15.4.0 |
| 2019-06 | RAN#84 | R5s190309 / RP-190903 | 0121 | - | F | Add new verified and e-mail agreed TTCN test cases in the TC lists in 38.523-3 (prose), Annex A | 15.4.0 |
| 2019-09 | RAN#85 | R5-195955 | 0297 | - | F | EN-DC: Test Model updates | 15.5.0 |
| 2019-09 | RAN#85 | R5-196754 | 0324 | - | F | Corrections to Paging calculation in clause 7.3.4 | 15.5.0 |
| 2019-09 | RAN#85 | R5-197222 | 0295 | 1 | F | Common aspects: Test Model updates | 15.5.0 |
| 2019-09 | RAN#85 | R5-197223 | 0296 | 1 | F | NR/5GC: Test Model updates | 15.5.0 |
| 2019-09 | RAN#85 | R5s190400 | 0163 | - | F | Correction to common ENDC TC preamble function | 15.5.0 |
| 2019-09 | RAN#85 | R5s190401 | 0164 | - | F | Corrections for RlcBearerRouting in EN-DC test cases | 15.5.0 |
| 2019-09 | RAN#85 | R5s190408 | 0166 | - | F | Correction to NR RLC test case 7.1.2.3.2 | 15.5.0 |
| 2019-09 | RAN#85 | R5s190410 | 0167 | - | F | Correction to ENDC NAS test case 10.2.1.1 | 15.5.0 |
| 2019-09 | RAN#85 | R5s190411 | 0168 | - | F | Correction to IP address check in Loopback Mode for ENDC TCs | 15.5.0 |
| 2019-09 | RAN#85 | R5s190412 | 0169 | - | F | Correction to ENDC testcase 8.2.5.3.1 | 15.5.0 |
| 2019-09 | RAN#85 | R5s190413 | 0170 | - | F | Correction to ENDC testcase 8.2.5.1.1 | 15.5.0 |
| 2019-09 | RAN#85 | R5s190414 | 0171 | - | F | Correction to ENDC testcase 8.2.2.4.1 | 15.5.0 |
| 2019-09 | RAN#85 | R5s190416 | 0172 | - | F | Correction to EN-DC test case 8.2.3.8.1 | 15.5.0 |
| 2019-09 | RAN#85 | R5s190419 | 0174 | - | B | EN-DC FR1 : Addition of NR RRC test case 8.2.3.15.1 | 15.5.0 |
| 2019-09 | RAN#85 | R5s190421 | 0175 | - | F | Correction to f_Get_NG_SecurityModeCmdMsg | 15.5.0 |
| 2019-09 | RAN#85 | R5s190424 | 0176 | - | F | Correction to ENDC testcase 7.1.3.5.4 | 15.5.0 |
| 2019-09 | RAN#85 | R5s190425 | 0177 | - | F | Correction to fl_NR_InitialiseSiScheduling | 15.5.0 |
| 2019-09 | RAN#85 | R5s190426 | 0178 | - | F | Correction to NR5GC test case 8.1.3.1.1 | 15.5.0 |
| 2019-09 | RAN#85 | R5s190429 | 0181 | - | F | Correction to ENDC Test case 7.1.2.3.2 | 15.5.0 |
| 2019-09 | RAN#85 | R5s190435 | 0186 | - | F | Correction to NR5GC test case 9.1.2.1 | 15.5.0 |
| 2019-09 | RAN#85 | R5s190436 | 0187 | - | F | Correction to function f_ContentOf_pc_nrBandX | 15.5.0 |
| 2019-09 | RAN#85 | R5s190442 | 0189 | - | F | Corrections for TTCN-3 timing functions for 5GNR | 15.5.0 |
| 2019-09 | RAN#85 | R5s190445 | 0192 | - | F | Correction to TTCN-3 encoding rules for 5G test cases | 15.5.0 |
| 2019-09 | RAN#85 | R5s190446 | 0193 | - | F | Correction for PHR-Config in 5G test cases | 15.5.0 |
| 2019-09 | RAN#85 | R5s190451 | 0198 | - | F | Correction to EN-DC RRC test case 8.2.1.1.1 | 15.5.0 |
| 2019-09 | RAN#85 | R5s190455 | 0202 | - | F | Correction to f_NR_CellInfo_SetPRACH_ConfigurationIndex | 15.5.0 |
| 2019-09 | RAN#85 | R5s190456 | 0203 | - | B | ENDC FR2 : Addition of NR RLC test case 7.1.2.3.7 | 15.5.0 |
| 2019-09 | RAN#85 | R5s190464 | 0204 | - | F | Correction for 5GSM PDU SESSION ESTABLISHMENT ACCEPT | 15.5.0 |
| 2019-09 | RAN#85 | R5s190465 | 0205 | - | F | Correction for common TTCN function f_IntegerList_Search() | 15.5.0 |
| 2019-09 | RAN#85 | R5s190466 | 0206 | - | F | Correction for 5GMM test case 9.1.6.1.1 | 15.5.0 |
| 2019-09 | RAN#85 | R5s190468 | 0208 | - | F | Corrections for NAS template function f_Check_NG_PDUSessionReleaseComplete | 15.5.0 |
| 2019-09 | RAN#85 | R5s190470 | 0209 | - | F | Correction to NAS typedefs QosFlowDescr and Qos_Rule | 15.5.0 |
| 2019-09 | RAN#85 | R5s190471 | 0210 | - | F | Corrections to NR-MRDC Capability check test case 8.2.1.1.1 | 15.5.0 |
| 2019-09 | RAN#85 | R5s190476 | 0213 | - | B | Addition of EN-DC PDCP test case 7.1.3.2.1 in FR1 | 15.5.0 |
| 2019-09 | RAN#85 | R5s190478 | 0214 | - | B | Addition of EN-DC PDCP test case 7.1.3.2.1 in FR2 | 15.5.0 |
| 2019-09 | RAN#85 | R5s190480 | 0215 | - | B | Addition of EN-DC PDCP test case 7.1.3.2.2 in FR1 | 15.5.0 |

| | | | | | | | |
|---|---|---|---|---|---|---|---|
| 2019-09 | RAN#85 | R5s190482 | 0216 | - | B | Addition of EN-DC PDCP test case 7.1.3.2.2 in FR2 | 15.5.0 |
| 2019-09 | RAN#85 | R5s190484 | 0217 | - | B | Addition of EN-DC PDCP test case 7.1.3.2.3 in FR2 | 15.5.0 |
| 2019-09 | RAN#85 | R5s190488 | 0218 | - | B | Addition of EN-DC PDCP test case 7.1.3.2.3 in FR1 | 15.5.0 |
| 2019-09 | RAN#85 | R5s190489 | 0219 | - | B | Addition of EN-DC test case 7.1.3.1.2 in FR1 | 15.5.0 |
| 2019-09 | RAN#85 | R5s190491 | 0220 | - | B | Addition of EN-DC test case 8.2.3.14.1 in FR1 | 15.5.0 |
| 2019-09 | RAN#85 | R5s190505 | 0224 | - | F | Correction for NR RRC test case 8.1.1.1.1 | 15.5.0 |
| 2019-09 | RAN#85 | R5s190506 | 0225 | - | B | Addition of EN-DC test case 7.1.2.3.8 in FR1 | 15.5.0 |
| 2019-09 | RAN#85 | R5s190508 | 0226 | - | F | Correction to PIXITs px_NR_PrimaryBandDeltas and px_NR_SecondaryBandDeltas | 15.5.0 |
| 2019-09 | RAN#85 | R5s190509 | 0227 | - | B | Addition of EN-DC test case 7.1.1.1.1a in FR1 | 15.5.0 |
| 2019-09 | RAN#85 | R5s190511 | 0228 | - | B | Addition of NR5GC test case 7.1.1.1.1a in FR1 | 15.5.0 |
| 2019-09 | RAN#85 | R5s190513 | 0229 | - | B | Addition of NR5GC test case 7.1.2.3.8 in FR1 | 15.5.0 |
| 2019-09 | RAN#85 | R5s190528 | 0234 | - | F | Correction to EN-DC test case 10.2.2.1 | 15.5.0 |
| 2019-09 | RAN#85 | R5s190529 | 0235 | - | F | Correction for EN-DC RRC test case 8.2.2.9.1 | 15.5.0 |
| 2019-09 | RAN#85 | R5s190530 | 0236 | - | F | Correction to band combination DC_(n)41AA | 15.5.0 |
| 2019-09 | RAN#85 | R5s190537 | 0239 | - | B | Addition of EN-DC test case 7.1.2.2.6 in FR1 | 15.5.0 |
| 2019-09 | RAN#85 | R5s190543 | 0242 | - | F | Rel-15 Jun'19 partial baseline upgrade for 5GS TTCN-3 Test Suites | 15.5.0 |
| 2019-09 | RAN#85 | R5s190550 | 0245 | - | B | Addition of EN-DC RLC test case 7.1.2.3.8 in FR2 | 15.5.0 |
| 2019-09 | RAN#85 | R5s190554 | 0247 | - | B | Addition of EN-DC PDCP test case 7.1.3.3.1 in FR1 | 15.5.0 |
| 2019-09 | RAN#85 | R5s190556 | 0248 | - | B | Addition of EN-DC PDCP test case 7.1.3.3.1 in FR2 | 15.5.0 |
| 2019-09 | RAN#85 | R5s190558 | 0249 | - | B | Addition of EN-DC PDCP test case 7.1.3.3.2 in FR1 | 15.5.0 |
| 2019-09 | RAN#85 | R5s190560 | 0250 | - | B | Addition of EN-DC PDCP test case 7.1.3.3.2 in FR2 | 15.5.0 |
| 2019-09 | RAN#85 | R5s190562 | 0251 | - | B | Addition of EN-DC PDCP test case 7.1.3.3.3 in FR1 | 15.5.0 |
| 2019-09 | RAN#85 | R5s190564 | 0252 | - | B | Addition of EN-DC PDCP test case 7.1.3.3.3 in FR2 | 15.5.0 |
| 2019-09 | RAN#85 | R5s190586 | 0260 | - | F | Correction to EN-DC RRC test case 8.2.3.4.1 | 15.5.0 |
| 2019-09 | RAN#85 | R5s190587 | 0261 | - | B | EN-DC FR1: Addition of RRC test case 8.2.3.13.1 | 15.5.0 |
| 2019-09 | RAN#85 | R5s190590 | 0263 | - | F | Correction to EN-DC test case 7.1.3.5.1 | 15.5.0 |
| 2019-09 | RAN#85 | R5s190593 | 0264 | - | F | Correction to EN-DC RRC test case 8.2.3.3.1 | 15.5.0 |
| 2019-09 | RAN#85 | R5s190607 | 0274 | - | F | Correction to common EN-DC function f_EUTRA38_ENDC_ReConfigAM_UM() | 15.5.0 |
| 2019-09 | RAN#85 | R5s190608 | 0275 | - | B | Addition of EN-DC RRC test case 8.2.3.1.1 in FR2 | 15.5.0 |
| 2019-09 | RAN#85 | R5s190610 | 0276 | - | B | Addition of EN-DC RRC test case 8.2.3.3.1 in FR2 | 15.5.0 |
| 2019-09 | RAN#85 | R5s190612 | 0277 | - | B | Addition of EN-DC RRC test case 8.2.3.5.1 in FR2 | 15.5.0 |
| 2019-09 | RAN#85 | R5s190614 | 0278 | - | B | Addition of EN-DC RRC test case 8.2.3.6.1 in FR2 | 15.5.0 |
| 2019-09 | RAN#85 | R5s190620 | 0281 | - | B | Addition of NR5GC test case 9.1.5.1.6 in FR1 | 15.5.0 |
| 2019-09 | RAN#85 | R5s190624 | 0283 | - | B | Addition of NR5GC test case 9.1.5.2.9 in FR1 | 15.5.0 |
| 2019-09 | RAN#85 | R5s190626 | 0284 | - | B | Addition of NR5GC test case 10.1.2.2 in FR1 | 15.5.0 |
| 2019-09 | RAN#85 | R5s190629 | 0286 | - | B | Addition of NR5GC test case 10.1.6.1 in FR1 | 15.5.0 |
| 2019-09 | RAN#85 | R5s190635 | 0078 | 1 | B | Addition of EN-DC PDCP test case 7.1.3.1.1 in FR1 | 15.5.0 |
| 2019-09 | RAN#85 | R5s190636 | 0085 | 1 | B | Addition of EN-DC PDCP test case 7.1.3.5.1 in FR2 | 15.5.0 |
| 2019-09 | RAN#85 | R5s190637 | 0087 | 1 | B | Addition of EN-DC PDCP test case 7.1.3.5.1 in FR1 | 15.5.0 |
| 2019-09 | RAN#85 | R5s190638 | 0088 | 1 | B | Addition of EN-DC PDCP test case 7.1.3.5.4 in FR2 | 15.5.0 |
| 2019-09 | RAN#85 | R5s190640 | 0289 | | B | Addition of NR5GC test case 7.1.2.3.10 in FR1 | 15.5.0 |
| 2019-09 | RAN#85 | R5s190643 | 0091 | 1 | B | Addition of EN-DC RLC test case 7.1.2.3.2 in FR2 | 15.5.0 |
| 2019-09 | RAN#85 | R5s190644 | 0093 | 1 | B | Addition of EN-DC RLC test case 7.1.2.3.2 in FR1 | 15.5.0 |
| 2019-09 | RAN#85 | R5s190645 | 0103 | 2 | B | Addition of EN-DC PDCP test case 7.1.3.5.2 in FR2 | 15.5.0 |
| 2019-09 | RAN#85 | R5s190647 | 0104 | 1 | B | Addition of EN-DC PDCP test case 7.1.3.5.2 in FR1 | 15.5.0 |
| 2019-09 | RAN#85 | R5s190648 | 0106 | 2 | B | Addition of NR test case 9.1.2.2 in FR1 | 15.5.0 |
| 2019-09 | RAN#85 | R5s190649 | 0107 | 1 | F | ENDC : Correction to RLC TCs | 15.5.0 |
| 2019-09 | RAN#85 | R5s190651 | 0109 | 1 | F | Correction for IP packet handling for EN-DC test cases | 15.5.0 |
| 2019-09 | RAN#85 | R5s190652 | 0110 | 1 | F | Correction to fl_NR5GC_QosRulesLength | 15.5.0 |
| 2019-09 | RAN#85 | R5s190653 | 0111 | 1 | F | Correction to fl_NR_Common_Init | 15.5.0 |
| 2019-09 | RAN#85 | R5s190654 | 0112 | 1 | F | Correction to IP PTC for NR5GC test cases | 15.5.0 |
| 2019-09 | RAN#85 | R5s190655 | 0113 | 1 | F | Correction to SA security mode procedure | 15.5.0 |
| 2019-09 | RAN#85 | R5s190656 | 0114 | 1 | B | Addition of EN-DC RLC test case 7.1.2.3.6 in FR1 | 15.5.0 |
| 2019-09 | RAN#85 | R5s190657 | 0115 | 1 | F | Correction to default value for PDUSessionEstablishmentRequest | 15.5.0 |
| 2019-09 | RAN#85 | R5s190658 | 0116 | 1 | F | Correction to Paging in NR5GC | 15.5.0 |
| 2019-09 | RAN#85 | R5s190659 | 0118 | 1 | B | ENDC FR1 : Addition of NR RLC test case 7.1.2.2.3 | 15.5.0 |
| 2019-09 | RAN#85 | R5s190661 | 0119 | 1 | F | Correction to NR5GC Release function f_NR_RRCRelease_Common | 15.5.0 |
| 2019-09 | RAN#85 | R5s190662 | 0120 | 1 | B | Addition of NR5GC test case 9.1.6.2.1 in FR1 | 15.5.0 |
| 2019-09 | RAN#85 | R5s190663 | 0122 | 1 | B | Addition of NR5GC RLC test case 7.1.2.2.1 in FR1 | 15.5.0 |
| 2019-09 | RAN#85 | R5s190664 | 0123 | 1 | B | Addition of NR5GC RLC test case 7.1.2.2.2 in FR1 | 15.5.0 |
| 2019-09 | RAN#85 | R5s190666 | 0124 | 1 | B | ENDC FR1 : Addition of NR RLC test case 7.1.2.2.4 | 15.5.0 |
| 2019-09 | RAN#85 | R5s190669 | 0292 | | B | Addition of NR5GC test case 8.1.5.1.1 in FR1 | 15.5.0 |
| 2019-09 | RAN#85 | R5s190675 | 0125 | 1 | B | Addition of NR5GC test case 7.1.2.3.1 in FR1 | 15.5.0 |
| 2019-09 | RAN#85 | R5s190676 | 0126 | 1 | B | Addition of NR5GC test case 7.1.2.2.3 in FR1 | 15.5.0 |
| 2019-09 | RAN#85 | R5s190677 | 0127 | 1 | B | Addition of EN-DC Session Management test case 10.2.2.1 | 15.5.0 |
| 2019-09 | RAN#85 | R5s190678 | 0128 | 1 | B | Addition of NR5GC test case 7.1.2.3.2 in FR1 | 15.5.0 |
| 2019-09 | RAN#85 | R5s190680 | 0129 | 1 | F | Correction to EN-DC testcase 10.2.1.1 | 15.5.0 |
| 2019-09 | RAN#85 | R5s190681 | 0130 | 1 | B | Addition of NR5GC test case 7.1.3.1.1 in FR1 | 15.5.0 |

| | | | | | | | |
|---|---|---|---|---|---|---|---|
| 2019-09 | RAN#85 | R5s190682 | 0131 | 1 | B | Addition of NR5GC test case 7.1.3.5.1 in FR1 | 15.5.0 |
| 2019-09 | RAN#85 | R5s190683 | 0132 | 1 | B | Addition of NR5GC test case 7.1.3.5.4 in FR1 | 15.5.0 |
| 2019-09 | RAN#85 | R5s190685 | 0136 | 1 | F | Correction to ENDC RRC test case 8.2.1.1.1 | 15.5.0 |
| 2019-09 | RAN#85 | R5s190688 | 0141 | 1 | B | Addition of NR5GC test case 7.1.3.1.2 in FR1 | 15.5.0 |
| 2019-09 | RAN#85 | R5s190689 | 0142 | 1 | B | Addition of NR5GC test case 7.1.2.3.3 in FR1 | 15.5.0 |
| 2019-09 | RAN#85 | R5s190690 | 0147 | 1 | F | Correction to generic function f_EUTRA_InitialRegistration_Step9_11 | 15.5.0 |
| 2019-09 | RAN#85 | R5s190691 | 0148 | 1 | F | Correction to ENDC testcase 8.2.3.1.1 | 15.5.0 |
| 2019-09 | RAN#85 | R5s190692 | 0154 | 1 | B | Addition of NR5GC test case 8.1.3.1.2 in FR1 | 15.5.0 |
| 2019-09 | RAN#85 | R5s190693 | 0155 | 1 | B | Addition of NR5GC test case 7.1.3.3.1 in FR1 | 15.5.0 |
| 2019-09 | RAN#85 | R5s190694 | 0156 | 1 | B | Addition of NR5GC test case 7.1.3.3.2 in FR1 | 15.5.0 |
| 2019-09 | RAN#85 | R5s190695 | 0157 | 1 | B | Addition of NR5GC test case 7.1.3.3.3 in FR1 | 15.5.0 |
| 2019-09 | RAN#85 | R5s190696 | 0158 | 1 | B | Addition of NR5GC test case 8.1.2.1.1 in FR1 | 15.5.0 |
| 2019-09 | RAN#85 | R5s190697 | 0159 | 1 | B | Addition of NR5GC test case 6.1.2.3 in FR1 | 15.5.0 |
| 2019-09 | RAN#85 | R5s190700 | 0161 | 1 | F | Correction to f_NG_Authentication_A4 | 15.5.0 |
| 2019-09 | RAN#85 | R5s190701 | 0089 | 1 | B | Addition of EN-DC PDCP test case 7.1.3.5.4 in FR1 | 15.5.0 |
| 2019-09 | RAN#85 | R5s190702 | 0298 | - | F | Corrections to EN-DC ESM test case 10.2.2.1 | 15.5.0 |
| 2019-09 | RAN#85 | R5s190703 | 0299 | - | F | Correction to cs_NR_ReqAspCommonPart and cr_PDU_SessionType | 15.5.0 |
| 2019-09 | RAN#85 | R5s190704 | 0300 | - | F | Correction to f_Check_NG_PDUSessionEstablishmentReq | 15.5.0 |
| 2019-09 | RAN#85 | R5s190705 | 0301 | - | F | Correction to f_NR_UE_DeRegisterOnSwitchOff | 15.5.0 |
| 2019-09 | RAN#85 | R5s190706 | 0302 | - | F | Correction to f_NR5GC_RegistrationReject | 15.5.0 |
| 2019-09 | RAN#85 | R5s190707 | 0303 | - | F | Correction to NR5GC testcase 9.1.2.2 | 15.5.0 |
| 2019-09 | RAN#85 | R5s190717 | 0309 | - | B | Addition of NR5GC test case 10.1.6.2 in FR1 | 15.5.0 |
| 2019-09 | RAN#85 | R5s190723 | 0311 | - | B | Addition of EN-DC test case 7.1.1.2.1 in FR1 | 15.5.0 |
| 2019-09 | RAN#85 | R5s190725 | 0312 | - | B | Addition of EN-DC test case 7.1.1.3.1 in FR1 | 15.5.0 |
| 2019-09 | RAN#85 | R5s190739 | 0318 | - | B | Addition of NR5GC test case 8.1.1.3.1 in FR1 | 15.5.0 |
| 2019-09 | RAN#85 | R5s190751 | 0327 | - | B | Addition of EN-DC test case 8.2.2.7.1 in FR1 | 15.5.0 |
| 2019-09 | RAN#85 | R5s190770 | 0338 | - | F | Correction of NR5GC PDCP test case 7.1.3.5.1 | 15.5.0 |
| 2019-09 | RAN#85 | R5s190771 | 0339 | - | F | Correction of NR5GC mobility management test case 9.1.5.2.4 | 15.5.0 |
| 2019-09 | RAN#85 | R5s190803 | 0134 | 1 | B | Addition of EN-DC RLC test case 7.1.2.3.10 in FR2 | 15.5.0 |
| 2019-09 | RAN#85 | R5s190804 | 0135 | 1 | B | Addition of EN-DC RLC test case 7.1.2.3.10 in FR1 | 15.5.0 |
| 2019-09 | RAN#85 | R5s190805 | 0140 | 1 | B | Addition of NR5GC test case 6.1.2.1 in FR1 | 15.5.0 |
| 2019-09 | RAN#85 | R5s190806 | 0143 | 1 | B | Addition of NR5GC test case 7.1.1.2.1 in FR1 | 15.5.0 |
| 2019-09 | RAN#85 | R5s190807 | 0144 | 1 | B | Addition of NR5GC test case 7.1.1.3.1 in FR1 | 15.5.0 |
| 2019-09 | RAN#85 | R5s190808 | 0149 | 1 | B | ENDC FR1: Addition of NR PDCP test case 7.1.3.4.2 | 15.5.0 |
| 2019-09 | RAN#85 | R5s190809 | 0150 | 1 | B | ENDC FR2: Addition of NR PDCP test case 7.1.3.4.2 | 15.5.0 |
| 2019-09 | RAN#85 | R5s190810 | 0152 | 1 | B | Addition of ENDC test case 7.1.2.3.9 in FR1 | 15.5.0 |
| 2019-09 | RAN#85 | R5s190820/ RP-191720 | 0356 | - | F | Add new verified and e-mail agreed TTCN test cases in the TC lists in 38.523-3 (prose), Annex A | 15.5.0 |
| 2019-12 | RAN#86 | R5-198992 | 0459 | 1 | F | Common aspects: Test Model updates | 15.6.0 |
| 2019-12 | RAN#86 | R5-198993 | 0460 | 1 | F | NR/5GC: Test Model updates | 15.6.0 |
| 2019-12 | RAN#86 | R5-198994 | 0461 | 1 | F | EN-DC: Test Model updates | 15.6.0 |
| 2019-12 | RAN#86 | R5s190869 | 0384 | | F | Correction to NR MAC test case 7.1.1.3.2 | 15.6.0 |
| 2019-12 | RAN#86 | R5s190871 | 0386 | | F | Correction for ENDC test case 8.2.3.3.1 | 15.6.0 |
| 2019-12 | RAN#86 | R5s190872 | 0387 | | B | EN-DC FR1 : Addition of NR RLC test case 7.1.2.3.11 | 15.6.0 |
| 2019-12 | RAN#86 | R5s190874 | 0388 | | F | Corrections to NR5GC Idle Mode test case 6.1.2.1 | 15.6.0 |
| 2019-12 | RAN#86 | R5s190886 | 0389 | | F | Corrections to NR MAC test case 7.1.1.2.1 | 15.6.0 |
| 2019-12 | RAN#86 | R5s190887 | 0390 | | F | Corrections to NR MAC test case 7.1.1.3.5 | 15.6.0 |
| 2019-12 | RAN#86 | R5s190888 | 0391 | | F | Corrections to common funcion f_NRL2_ReconfigExistingAndAddNewDRBs() | 15.6.0 |
| 2019-12 | RAN#86 | R5s190889 | 0392 | | F | Corrections to NR MAC test case 7.1.1.3.1 | 15.6.0 |
| 2019-12 | RAN#86 | R5s190890 | 0393 | | F | Corrections to NR RLC test case 7.1.2.3.9 | 15.6.0 |
| 2019-12 | RAN#86 | R5s190891 | 0394 | | F | Corrections to NR RLC test case 7.1.2.3.8 | 15.6.0 |
| 2019-12 | RAN#86 | R5s190893 | 0396 | | F | Corrections for NR RRC test case 8.1.1.4.2 | 15.6.0 |
| 2019-12 | RAN#86 | R5s190894 | 0397 | | F | Correction to NR RLC test case 7.1.2.3.7 | 15.6.0 |
| 2019-12 | RAN#86 | R5s190897 | 0400 | | F | Correct to NR measurement test case 8.1.3.1.1 | 15.6.0 |
| 2019-12 | RAN#86 | R5s190898 | 0401 | | F | Correction to NR PDCP test case 7.1.3.5.1 | 15.6.0 |
| 2019-12 | RAN#86 | R5s190899 | 0402 | | F | Correction to NR MAC test case 7.1.1.3.4 | 15.6.0 |
| 2019-12 | RAN#86 | R5s190900 | 0403 | | F | Correction to ENDC template cs_RadioBearer_Reconfig | 15.6.0 |
| 2019-12 | RAN#86 | R5s190901 | 0404 | | F | Correction to ENDC test cases 7.1.2.3.1 and 7.1.2.3.2 | 15.6.0 |
| 2019-12 | RAN#86 | R5s190905 | 0407 | | F | Corrections to NR RLC test case 7.1.2.2.6 | 15.6.0 |
| 2019-12 | RAN#86 | R5s190906 | 0408 | | F | Corrections to NR RLC test case 7.1.2.3.5 | 15.6.0 |
| 2019-12 | RAN#86 | R5s190909 | 0411 | | F | Correction to EN-DC RRC test case 8.2.2.7.1 | 15.6.0 |
| 2019-12 | RAN#86 | R5s190910 | 0412 | | F | Correction for NR5GC cell intialsiation function | 15.6.0 |
| 2019-12 | RAN#86 | R5s190911 | 0413 | | F | Corrections to NR RLC test case 7.1.2.3.3 | 15.6.0 |
| 2019-12 | RAN#86 | R5s190914 | 0416 | | B | EN-DC FR2 : Addition of NR RLC test case 7.1.2.3.11 | 15.6.0 |
| 2019-12 | RAN#86 | R5s190916 | 0417 | | F | Corrections for EN-DC PDCP test case 7.1.3.4.2 | 15.6.0 |
| 2019-12 | RAN#86 | R5s190918 | 0419 | | F | Corrections for NR PDCP ciphering test cases 7.1.3.3.x | 15.6.0 |
| 2019-12 | RAN#86 | R5s190919 | 0420 | | F | Correction to f_NR5GC_PDUSessionEstablishment | 15.6.0 |
| 2019-12 | RAN#86 | R5s190920 | 0421 | | F | Correction to EN-DC ESM test case 10.2.2.1 | 15.6.0 |

| | | | | | | | |
|---|---|---|---|---|---|---|---|
| 2019-12 | RAN#86 | R5s190925 | 0424 | | B | EN-DC FR2 : Addition of EN-DC RRC test case 8.2.3.14.1 | 15.6.0 |
| 2019-12 | RAN#86 | R5s190927 | 0425 | | F | Corrections to NR RLC test cases 7.1.2.2.3 and 7.1.2.2.4 | 15.6.0 |
| 2019-12 | RAN#86 | R5s190928 | 0426 | | F | Correction to type record LADN_Ind | 15.6.0 |
| 2019-12 | RAN#86 | R5s190929 | 0427 | | F | Correction to f_NR5GC_RRC_Idle_Steps5_9_AKA | 15.6.0 |
| 2019-12 | RAN#86 | R5s190930 | 0428 | | F | Correction to NR5GC testcase 9.1.2.1 | 15.6.0 |
| 2019-12 | RAN#86 | R5s190931 | 0429 | | F | NR5GC FR1 : Re-verification of NR5GC RRC test case 8.1.1.2.1 | 15.6.0 |
| 2019-12 | RAN#86 | R5s190936 | 0434 | | F | Corrections to NR5GC RRC test case 8.1.2.1.1 | 15.6.0 |
| 2019-12 | RAN#86 | R5s190938 | 0435 | | B | Addition of NR5GC 5GMM test case 9.1.5.1.5 in FR1 | 15.6.0 |
| 2019-12 | RAN#86 | R5s190943 | 0436 | | F | Correction for EN-DC measurement template | 15.6.0 |
| 2019-12 | RAN#86 | R5s190944 | 0438 | | B | NR5GC FR1 : Addition of 5GSM test case 10.1.2.1 | 15.6.0 |
| 2019-12 | RAN#86 | R5s190948 | 0440 | | B | NR5GC FR1 : Addition of SDAP test case 7.1.4.2 | 15.6.0 |
| 2019-12 | RAN#86 | R5s190953 | 0441 | | F | Correction to Kssb and offset parameters for n71 | 15.6.0 |
| 2019-12 | RAN#86 | R5s190954 | 0442 | | F | Correction to Kssb and offset parameters for n5 | 15.6.0 |
| 2019-12 | RAN#86 | R5s190957 | 0444 | | B | NR5GC FR1 : Addition of 5GMM test case 9.1.1.4 | 15.6.0 |
| 2019-12 | RAN#86 | R5s190959 | 0445 | | B | NR5GC FR1 : Addition of 5GMM test case 9.1.5.1.11 | 15.6.0 |
| 2019-12 | RAN#86 | R5s190961 | 0446 | | B | EN-DC FR2 : Addition of NR MAC test case 7.1.1.3.2 | 15.6.0 |
| 2019-12 | RAN#86 | R5s190966 | 0449 | | F | Correction for NR MAC test case 7.1.1.3.5 | 15.6.0 |
| 2019-12 | RAN#86 | R5s190968 | 0451 | | F | Correction for NR MAC test case 7.1.1.2.1 | 15.6.0 |
| 2019-12 | RAN#86 | R5s190972 | 0145 | 1 | B | Addition of NR5GC test case 7.1.1.3.3 in FR1 | 15.6.0 |
| 2019-12 | RAN#86 | R5s190973 | 0151 | 1 | B | Addition of NR5GC test case 7.1.1.3.4 in FR1 | 15.6.0 |
| 2019-12 | RAN#86 | R5s190974 | 0160 | 1 | B | Addition of NR5GC test case 7.1.1.3.5 in FR1 | 15.6.0 |
| 2019-12 | RAN#86 | R5s190975 | 0222 | 1 | B | Addition of EN-DC test case 7.1.1.3.3 in FR1 | 15.6.0 |
| 2019-12 | RAN#86 | R5s190976 | 0223 | 1 | B | Addition of EN-DC test case 7.1.1.3.5 in FR1 | 15.6.0 |
| 2019-12 | RAN#86 | R5s190977 | 0232 | 1 | B | Addition of EN-DC test case 7.1.1.3.6 in FR1 | 15.6.0 |
| 2019-12 | RAN#86 | R5s190978 | 0233 | 1 | B | Addition of NR5GC test case 7.1.1.3.6 in FR1 | 15.6.0 |
| 2019-12 | RAN#86 | R5s190979 | 0240 | 1 | B | ENDC FR2: Addition of RLC AM test case 7.1.2.3.9 | 15.6.0 |
| 2019-12 | RAN#86 | R5s190980 | 0241 | 1 | F | EN-DC: Indication of initial RACH on NR cell | 15.6.0 |
| 2019-12 | RAN#86 | R5s190981 | 0246 | 1 | B | EN-DC FR1 : Addition of MAC test case 7.1.1.3.4 | 15.6.0 |
| 2019-12 | RAN#86 | R5s190982 | 0254 | 1 | B | EN-DC FR2 : Addition of RLC test case 7.1.2.2.4 | 15.6.0 |
| 2019-12 | RAN#86 | R5s190984 | 0453 | | F | Correction to function f_NR_UE_DeRegisterOnSwitchOff | 15.6.0 |
| 2019-12 | RAN#86 | R5s190986 | 0454 | | F | Correction for NR MAC test case 7.1.1.3.1 | 15.6.0 |
| 2019-12 | RAN#86 | R5s190987 | 0455 | | F | Corrections to 5GSM test case 10.1.5.1 | 15.6.0 |
| 2019-12 | RAN#86 | R5s190988 | 0258 | 1 | B | Addition of EN-DC RLC test cases 7.1.2.3.6 in FR2 | 15.6.0 |
| 2019-12 | RAN#86 | R5s190989 | 0272 | 1 | B | EN-DC FR2: Addition of MAC test case 7.1.1.3.4 | 15.6.0 |
| 2019-12 | RAN#86 | R5s190990 | 0273 | 1 | B | Addition of NR5GC test case 7.1.2.3.9 in FR1 | 15.6.0 |
| 2019-12 | RAN#86 | R5s190991 | 0456 | | B | EN-DC FR2 : Addition of NR RLC test case 7.1.2.2.1 | 15.6.0 |
| 2019-12 | RAN#86 | R5s190993 | 0457 | | B | EN-DC FR2 : Addition of NR PDCP test case 7.1.3.1.1 | 15.6.0 |
| 2019-12 | RAN#86 | R5s190995 | 0279 | 1 | B | EN-DC FR2 : Addition of RRC test case 8.2.3.4.1 | 15.6.0 |
| 2019-12 | RAN#86 | R5s190997 | 0458 | | B | EN-DC FR2 : Addition of NR RLC test case 7.1.2.3.1 | 15.6.0 |
| 2019-12 | RAN#86 | R5s191001 | 0280 | 1 | B | EN-DC FR2 : Addition of RRC test case 8.2.3.7.1 | 15.6.0 |
| 2019-12 | RAN#86 | R5s191002 | 0288 | 1 | B | Addition of NR test case 7.1.2.2.6 in FR1 | 15.6.0 |
| 2019-12 | RAN#86 | R5s191003 | 0290 | 1 | B | Addition of NR test case 8.1.1.1.2 in FR1 | 15.6.0 |
| 2019-12 | RAN#86 | R5s191004 | 0291 | 1 | B | Addition of NR5GC test case 8.1.1.4.2 in FR1 | 15.6.0 |
| 2019-12 | RAN#86 | R5s191005 | 0294 | 1 | B | Addition of NR5GC test case 10.1.5.1 in FR1 | 15.6.0 |
| 2019-12 | RAN#86 | R5s191006 | 0137 | 2 | B | Addition of NR5GC test case 7.1.1.3.2 in FR1 | 15.6.0 |
| 2019-12 | RAN#86 | R5s191007 | 0305 | 1 | B | NR5GC FR1 : Addition of RLC test case 7.1.2.2.4 | 15.6.0 |
| 2019-12 | RAN#86 | R5s191008 | 0308 | 1 | B | NR5GC FR1 : Addition of RLC test case 7.1.2.3.6 | 15.6.0 |
| 2019-12 | RAN#86 | R5s191009 | 0310 | 1 | B | Addition of NR5GC test case 9.1.3.1 in FR1 | 15.6.0 |
| 2019-12 | RAN#86 | R5s191011 | 0313 | 1 | B | Addition of EN-DC test case 7.1.2.3.3 in FR1 | 15.6.0 |
| 2019-12 | RAN#86 | R5s191012 | 0314 | 1 | B | Addition of NR5GC test case 7.1.2.3.5 in FR1 | 15.6.0 |
| 2019-12 | RAN#86 | R5s191013 | 0320 | 1 | B | EN-DC FR2 : Addition of NR MAC test case 7.1.1.3.6 | 15.6.0 |
| 2019-12 | RAN#86 | R5s191014 | 0328 | 1 | B | EN-DC FR2 : Addition of MAC test case 7.1.1.3.5 | 15.6.0 |
| 2019-12 | RAN#86 | R5s191015 | 0329 | 1 | F | Correction to 5GSM test case 10.1.5.1 | 15.6.0 |
| 2019-12 | RAN#86 | R5s191016 | 0333 | 1 | B | Addition of NR5GC test case 9.1.5.2.8 in FR1 | 15.6.0 |
| 2019-12 | RAN#86 | R5s191017 | 0334 | 1 | B | EN-DC FR2 : Addition of NR MAC test case 7.1.1.1.1a | 15.6.0 |
| 2019-12 | RAN#86 | R5s191018 | 0336 | 1 | B | Addition of NR5GC test case 7.1.1.1.6 in FR1 | 15.6.0 |
| 2019-12 | RAN#86 | R5s191019 | 0337 | 1 | B | Addition of NR5GC test case 7.1.1.3.7 in FR1 | 15.6.0 |
| 2019-12 | RAN#86 | R5s191020 | 0340 | 1 | B | Addition of EN-DC test case 7.1.2.3.5 in FR1 | 15.6.0 |
| 2019-12 | RAN#86 | R5s191021 | 0341 | 1 | B | Addition of NR5GC test case 7.1.1.2.3 in FR1 | 15.6.0 |
| 2019-12 | RAN#86 | R5s191022 | 0342 | 1 | B | Addition of NR5GC test case 8.1.3.1.5 in FR1 | 15.6.0 |
| 2019-12 | RAN#86 | R5s191023 | 0343 | 1 | B | Addition of NR5GC test case 8.1.3.1.8 in FR1 | 15.6.0 |
| 2019-12 | RAN#86 | R5s191025 | 0345 | 1 | B | EN-DC FR1 : Addition of NR RLC test case 7.1.1.3.2 | 15.6.0 |
| 2019-12 | RAN#86 | R5s191026 | 0346 | 1 | B | Addition of EN-DC test case 7.1.1.3.7 in FR1 | 15.6.0 |
| 2019-12 | RAN#86 | R5s191027 | 0348 | 1 | B | ENDC FR1: Addition of NR RLC AM test case 7.1.2.3.7 | 15.6.0 |
| 2019-12 | RAN#86 | R5s191028 | 0349 | 1 | B | Addition of NR test case 7.1.2.3.7 in FR1 | 15.6.0 |
| 2019-12 | RAN#86 | R5s191030 | 0355 | 1 | F | Corrected usage of ULGrant_Period_Type for NR | 15.6.0 |
| 2019-12 | RAN#86 | R5s191032 | 0360 | 1 | B | Addition of NR MAC test case 7.1.1.4.1.1 | 15.6.0 |
| 2019-12 | RAN#86 | R5s191034 | 0365 | 1 | B | Addition of EN-DC test case 7.1.1.1.1 in FR1 | 15.6.0 |
| 2019-12 | RAN#86 | R5s191035 | 0373 | 1 | F | Correction to fl_NR5GC_QoSFlowsLength | 15.6.0 |
| 2019-12 | RAN#86 | R5s191036 | 0374 | 1 | F | Correction to ENDC Test Case 8.2.5.3.1 | 15.6.0 |
| 2019-12 | RAN#86 | R5s191041 | 0465 | - | F | Correction to function f_NR_UE_DeRegisterOnSwitchOff | 15.6.0 |

| | | | | | | | |
|---|---|---|---|---|---|---|---|
| 2019-12 | RAN#86 | R5s191049 | 0468 | - | F | Correction to EN-DC MAC test case 7.1.1.3.6 | 15.6.0 |
| 2019-12 | RAN#86 | R5s191050 | 0469 | - | F | Correction to capability check functions | 15.6.0 |
| 2019-12 | RAN#86 | R5s191099 | 0353 | 1 | B | Addition of EN-DC RLC test case 7.1.2.2.6 in FR2 | 15.6.0 |
| 2019-12 | RAN#86 | R5s191100 | 0363 | 1 | F | Correction for EN-DC MAC test case 7.1.1.1.1a | 15.6.0 |
| 2019-12 | RAN#86 | R5s191101 | 0364 | 1 | B | Addition of EN-DC test case 7.1.1.1.2 in FR1 | 15.6.0 |
| 2019-12 | RAN#86 | R5s191102 | 0366 | 1 | B | Addition of NR5GC test case 7.1.1.1.2 in FR1 | 15.6.0 |
| 2019-12 | RAN#86 | R5s191103 | 0367 | 1 | B | Addition of EN-DC test case 7.1.3.4.1 in FR1 | 15.6.0 |
| 2019-12 | RAN#86 | R5s191104 | 0369 | 1 | F | Corrections for NR DCI formats 0-1 and 1-1 | 15.6.0 |
| 2019-12 | RAN#86 | R5s191144 | 0344 | 1 | B | Addition of NR5GC test case 7.1.1.1.3 in FR1 | 15.6.0 |
| 2019-12 | RAN#86 | R5s191156 | 0354 | 1 | B | Addition of NR5GC test case 9.1.7.1 in FR1 | 15.6.0 |
| 2019-12 | RAN#86 | R5s191157/ RP-192496 | 0520 | - | F | Add new verified and e-mail agreed TTCN test cases in the TC lists in 38.523-3 (prose), Annex A | 15.6.0 |
| 2020-03 | RAN#87 | R5-201150 | 0692 | 1 | F | 5G Test Models updates | 15.7.0 |
| 2020-03 | RAN#87 | R5s200049 | 0585 | - | B | NR5GC FR1 : Addition of NAS test case 9.1.1.5 | 15.7.0 |
| 2020-03 | RAN#87 | R5s200051 | 0586 | - | F | Correction to PDCP testcases 7.1.3.2.x and 7.1.3.3.x | 15.7.0 |
| 2020-03 | RAN#87 | R5s200052 | 0587 | - | F | Correction to template cs_RadioBearer_Reconfig | 15.7.0 |
| 2020-03 | RAN#87 | R5s200053 | 0588 | - | F | Correction to EN-DC RRC test cases 8.2.2.4.1 and 8.2.2.5.1 | 15.7.0 |
| 2020-03 | RAN#87 | R5s200054 | 0589 | - | F | Corrections for NR RLC test case 7.1.2.3.7 | 15.7.0 |
| 2020-03 | RAN#87 | R5s200055 | 0590 | - | F | Correction for 5GMM test case 9.1.2.1 | 15.7.0 |
| 2020-03 | RAN#87 | R5s200056 | 0591 | - | F | Correction to NR cell info intiialsiation function | 15.7.0 |
| 2020-03 | RAN#87 | R5s200057 | 0592 | - | F | Correction to some NR MAC test cases | 15.7.0 |
| 2020-03 | RAN#87 | R5s200059 | 0594 | - | F | Correction to NR MAC test case 7.1.1.1.1 | 15.7.0 |
| 2020-03 | RAN#87 | R5s200062 | 0597 | - | F | Correction to NR MAC test case 7.1.1.3.7 | 15.7.0 |
| 2020-03 | RAN#87 | R5s200063 | 0598 | - | F | Correction to NR PDCP test case 7.1.3.4.1 | 15.7.0 |
| 2020-03 | RAN#87 | R5s200067 | 0601 | - | F | Correction to NR5GC Test Case 6.1.2.1 | 15.7.0 |
| 2020-03 | RAN#87 | R5s200069 | 0603 | - | F | Correction to the function f_NR5GC_RRC_Idle_Steps5_9_AKA | 15.7.0 |
| 2020-03 | RAN#87 | R5s200071 | 0605 | - | F | Correction to NR5GC Test Case 7.1.2.2.3, 7.1.2.2.4 | 15.7.0 |
| 2020-03 | RAN#87 | R5s200072 | 0606 | - | F | Correction to NR5GC Test Case 7.1.1.1.6 | 15.7.0 |
| 2020-03 | RAN#87 | R5s200074 | 0608 | - | F | Correction to NR5GC testcase 7.1.3.1.1 | 15.7.0 |
| 2020-03 | RAN#87 | R5s200075 | 0609 | - | F | Correction to MAC testcase 7.1.1.3.3 | 15.7.0 |
| 2020-03 | RAN#87 | R5s200076 | 0610 | - | F | Correction to NR5GC common template cs_NR_RachProcedureConfig_CRNTI_HO | 15.7.0 |
| 2020-03 | RAN#87 | R5s200077 | 0611 | - | F | Correction to NR5GC Test Case 10.1.5.1 | 15.7.0 |
| 2020-03 | RAN#87 | R5s200078 | 0612 | - | F | Correction to NR5GC Test Case 7.1.1.1.6 | 15.7.0 |
| 2020-03 | RAN#87 | R5s200079 | 0613 | - | F | Correction to NR measurement test cases | 15.7.0 |
| 2020-03 | RAN#87 | R5s200080 | 0614 | - | F | Correction to NR5GC test case7.1.1.2.3 | 15.7.0 |
| 2020-03 | RAN#87 | R5s200081 | 0615 | - | B | Addition of NR5GC test case 8.1.3.1.4 in FR1 | 15.7.0 |
| 2020-03 | RAN#87 | R5s200083 | 0616 | - | B | Addition of NR5GC test case 8.1.3.1.7 in FR1 | 15.7.0 |
| 2020-03 | RAN#87 | R5s200085 | 0617 | - | B | Addition of NR5GC test case 8.1.3.1.10 in FR1 | 15.7.0 |
| 2020-03 | RAN#87 | R5s200087 | 0618 | - | F | Correction to NR5GC test case 9.1.7.1 | 15.7.0 |
| 2020-03 | RAN#87 | R5s200088 | 0619 | - | F | Correction to NR5GC test case 7.1.1.2.4 | 15.7.0 |
| 2020-03 | RAN#87 | R5s200090 | 0621 | - | B | Addition of NR5GC test case 6.1.1.3 in FR1 | 15.7.0 |
| 2020-03 | RAN#87 | R5s200092 | 0622 | - | B | Addition of NR5GC test case 6.1.1.7 in FR1 | 15.7.0 |
| 2020-03 | RAN#87 | R5s200094 | 0623 | - | F | Correction to NR MAC test case 7.1.1.3.7 | 15.7.0 |

| | | | | | | | |
|---|---|---|---|---|---|---|---|
| | | | | | | | |

| | | | | | | | |
|---|---|---|---|---|---|---|---|
| 2020-03 | RAN#87 | R5s200098 | 0627 | - | F | Correction to NR RLC test case 7.1.2.3.7 | 15.7.0 |
| 2020-03 | RAN#87 | R5s200101 | 0630 | - | F | Correction in ENDC TC 7.1.1.1.1 | 15.7.0 |
| 2020-03 | RAN#87 | R5s200102 | 0631 | - | F | Correction to NR SA RRC test case 8.1.1.4.1 | 15.7.0 |
| 2020-03 | RAN#87 | R5s200104 | 0633 | - | F | Correction to 5GMM test case 9.1.5.2.7 | 15.7.0 |
| 2020-03 | RAN#87 | R5s200106 | 0635 | - | F | Corrections for SDAP test case 7.1.4.2 | 15.7.0 |
| 2020-03 | RAN#87 | R5s200108 | 0637 | - | F | Correction to RLC Test Case 7.1.2.3.9 | 15.7.0 |
| 2020-03 | RAN#87 | R5s200109 | 0638 | - | F | Correction to MAC Test Case 7.1.1.3.7 | 15.7.0 |
| 2020-03 | RAN#87 | R5s200110 | 0639 | - | F | Correction to NR5GC Test Case 6.1.2.3 | 15.7.0 |
| 2020-03 | RAN#87 | R5s200111 | 0640 | - | F | Correction to NR MAC test case 7.1.1.1.2 | 15.7.0 |
| 2020-03 | RAN#87 | R5s200116 | 0642 | - | B | Addition of NR5GC test case 6.1.1.1 in FR1 | 15.7.0 |
| 2020-03 | RAN#87 | R5s200118 | 0643 | - | B | Addition of NR5GC test case 9.1.6.1.4 in FR1 | 15.7.0 |
| 2020-03 | RAN#87 | R5s200120 | 0644 | - | F | Correction to ENDC RLC AM TC 7.1.2.3.10 | 15.7.0 |
| 2020-03 | RAN#87 | R5s200121 | 0645 | - | F | Correction to ENDC RLC UM TC 7.1.2.2.6 | 15.7.0 |
| 2020-03 | RAN#87 | R5s200122 | 0646 | - | F | Correction to IntraBand Non-Contiguous frequency for DC_41A_n41A | 15.7.0 |
| 2020-03 | RAN#87 | R5s200123 | 0647 | - | F | Correction to NR RRC test case 8.2.5.1.1 | 15.7.0 |
| 2020-03 | RAN#87 | R5s200125 | 0649 | - | F | Correction to 5GC test case 9.1.6.1.2 | 15.7.0 |
| 2020-03 | RAN#87 | R5s200126 | 0650 | - | F | Correction to NR PDCP test case 7.1.3.4.2 | 15.7.0 |
| 2020-03 | RAN#87 | R5s200134 | 0651 | - | B | Addition of NR5GC test case 9.1.5.1.10 in FR1 | 15.7.0 |
| 2020-03 | RAN#87 | R5s200138 | 0653 | - | B | Addition of NR5GC test case 9.1.5.1.12 in FR1 | 15.7.0 |
| 2020-03 | RAN#87 | R5s200142 | 0655 | - | B | Addition of NR5GC test case 9.1.5.1.13 in FR1 | 15.7.0 |
| 2020-03 | RAN#87 | R5s200145 | 0657 | - | B | Addition of NR5GC test case 8.1.5.2.1 in FR1 | 15.7.0 |
| 2020-03 | RAN#87 | R5s200148 | 0659 | - | F | Correction to NR RLC test case 7.1.2.3.5 | 15.7.0 |
| 2020-03 | RAN#87 | R5s200149 | 0660 | - | B | Addition of EN-DC RRC test case 8.2.2.7.1 in FR2 | 15.7.0 |
| 2020-03 | RAN#87 | R5s200151 | 0661 | - | B | Addition of EN-DC PDCP test case 7.1.3.4.1 in FR2 | 15.7.0 |
| 2020-03 | RAN#87 | R5s200153 | 0662 | - | F | Correction to ENDC PDCP Test Case 7.1.3.5.3 | 15.7.0 |
| 2020-03 | RAN#87 | R5s200154 | 0663 | - | B | NR5GC FR1 : Addition of 5GMM test case 9.1.5.1.8 | 15.7.0 |
| 2020-03 | RAN#87 | R5s200156 | 0664 | - | B | NR5GC FR1 : Addition of NR Idle Mode test case 6.1.2.9 | 15.7.0 |
| 2020-03 | RAN#87 | R5s200158 | 0665 | - | F | Correction to ENDC testcase 10.2.1.1 | 15.7.0 |
| 2020-03 | RAN#87 | R5s200159 | 0666 | - | F | Correction to NR5GC testcase 7.1.1.1.1 | 15.7.0 |
| 2020-03 | RAN#87 | R5s200160 | 0667 | - | F | Correction to capability check functions | 15.7.0 |
| 2020-03 | RAN#87 | R5s200161 | 0668 | - | F | Correction to template cads_NR_ULGrantAllocation_REQ | 15.7.0 |
| 2020-03 | RAN#87 | R5s200162 | 0669 | - | F | Correction for common function fl_SDAP_Preamble_Part1() | 15.7.0 |
| 2020-03 | RAN#87 | R5s200165 | 0671 | - | B | Addition of NR5GC test case 6.1.1.5 in FR1 | 15.7.0 |
| 2020-03 | RAN#87 | R5s200169 | 0673 | - | B | Addition of NR5GC test case 6.1.1.4 in FR1 | 15.7.0 |
| 2020-03 | RAN#87 | R5s200171 | 0674 | - | B | Addition of ENDC test case 8.2.2.8.1 in FR1 | 15.7.0 |
| 2020-03 | RAN#87 | R5s200173 | 0675 | - | B | Addition of NR5GC test case 6.1.1.2 in FR1 | 15.7.0 |
| 2020-03 | RAN#87 | R5s200176 | 0677 | - | B | Addition of NR5GC test case 9.1.5.2.6 in FR1 | 15.7.0 |

| | | | | | | | |
|---|---|---|---|---|---|---|---|
| 2020-03 | RAN#87 | R5s200178 | 0678 | - | B | NR5GC FR1: Addition of NR RRC IDLE test case 6.1.2.2 | 15.7.0 |
| 2020-03 | RAN#87 | R5s200180 | 0679 | - | F | Correction to NR RLC test case 7.1.2.2.6 | 15.7.0 |
| 2020-03 | RAN#87 | R5s200181 | 0680 | - | F | Correction to NR5GC RRC test case 8.1.3.2.1 | 15.7.0 |
| 2020-03 | RAN#87 | R5s200182 | 0351 | 1 | B | Addition of NR5GC test case 7.1.1.1.1 in FR1 | 15.7.0 |
| 2020-03 | RAN#87 | R5s200183 | 0361 | 1 | B | Addition of NR MAC test case 7.1.1.4.2.1 | 15.7.0 |
| 2020-03 | RAN#87 | R5s200184 | 0395 | 1 | F | Corrections to NR MAC test case 7.1.1.4.1.1 | 15.7.0 |
| 2020-03 | RAN#87 | R5s200185 | 0398 | 1 | F | Corrections to NR MAC test case 7.1.1.4.2.1 | 15.7.0 |
| 2020-03 | RAN#87 | R5s200186 | 0431 | 1 | F | Corrections to NR MAC test case 7.1.1.3.3 | 15.7.0 |
| 2020-03 | RAN#87 | R5s200187 | 0432 | 1 | F | Corrections to NR MAC test case 7.1.1.1.1 | 15.7.0 |
| 2020-03 | RAN#87 | R5s200189 | 0452 | 1 | B | Addition of EN-DC MAC test case 7.1.1.1.1 in FR2 | 15.7.0 |
| 2020-03 | RAN#87 | R5s200190 | 0463 | 1 | F | Correction to RLC AM test case 7.1.2.3.9 | 15.7.0 |
| 2020-03 | RAN#87 | R5s200191 | 0464 | 1 | F | Correction for EN-DC MAC test case 7.1.1.3.7 | 15.7.0 |
| 2020-03 | RAN#87 | R5s200192 | 0466 | 1 | B | Addition of EN-DC PDCP test case 7.1.3.5.3 in FR1 | 15.7.0 |
| 2020-03 | RAN#87 | R5s200193 | 0467 | 1 | B | Addition of EN-DC PDCP test case 7.1.3.5.3 in FR2 | 15.7.0 |
| 2020-03 | RAN#87 | R5s200195 | 0470 | 1 | B | NR5GC FR1 : Addition of NR5GC RRC test case 8.1.1.4.1 | 15.7.0 |
| 2020-03 | RAN#87 | R5s200196 | 0472 | 1 | F | Corrections for some NR MAC test cases in NR5GC operation | 15.7.0 |
| 2020-03 | RAN#87 | R5s200197 | 0473 | 1 | B | NR5GC : Addition of NR PDCP test case 7.1.3.4.2 in FR1 | 15.7.0 |
| 2020-03 | RAN#87 | R5s200198 | 0474 | 1 | F | Correction to ENDC Test Case 7.1.2.3.8 | 15.7.0 |
| 2020-03 | RAN#87 | R5s200199 | 0475 | 1 | F | Correction to MR-DC capability check | 15.7.0 |
| 2020-03 | RAN#87 | R5s200202 | 0476 | 1 | B | NR5GC : Addition of NR RRC test case 8.1.5.6.3 in FR1 | 15.7.0 |
| 2020-03 | RAN#87 | R5s200204 | 0477 | 1 | B | NR5GC FR1 : Addition of NR RLC test case 7.1.2.2.5 | 15.7.0 |
| 2020-03 | RAN#87 | R5s200205 | 0478 | 1 | B | EN-DC FR1 : Addition of NR RLC test case 7.1.2.2.5 | 15.7.0 |
| 2020-03 | RAN#87 | R5s200208 | 0681 | | B | EN-DC FR1 : Addition of NR MAC test case 7.1.1.4.1.1 | 15.7.0 |
| 2020-03 | RAN#87 | R5s200211 | 0483 | 1 | F | Correction for EN-DC ESM test case 10.2.2.1 | 15.7.0 |
| 2020-03 | RAN#87 | R5s200212 | 0486 | 1 | F | Correction to NR5GC Test Case 9.1.3.1 | 15.7.0 |
| 2020-03 | RAN#87 | R5s200213 | 0487 | 1 | B | NR5GC FR1 : Addition of NR5GC RRC test case 8.1.3.1.3 | 15.7.0 |
| 2020-03 | RAN#87 | R5s200215 | 0488 | 1 | B | NR5GC : Addition of NR RRC test case 9.1.5.2.7 in FR1 | 15.7.0 |
| 2020-03 | RAN#87 | R5s200216 | 0489 | 1 | B | Addition of EN-DC RLC test case 7.1.2.3.3 in FR2 | 15.7.0 |
| 2020-03 | RAN#87 | R5s200217 | 0490 | 1 | B | NR5GC : Addition of NR RRC test case 8.1.1.2.3 in FR1 | 15.7.0 |
| 2020-03 | RAN#87 | R5s200218 | 0491 | 1 | B | Addition of EN-DC RLC test case 7.1.2.2.3 in FR2 | 15.7.0 |
| 2020-03 | RAN#87 | R5s200219 | 0492 | 1 | B | NR5GC FR1 : Addition of NR5GC RRC test case 8.1.3.1.6 | 15.7.0 |
| 2020-03 | RAN#87 | R5s200220 | 0493 | 1 | B | NR5GC FR1 : Addition of NR5GC RRC test case 8.1.3.1.9 | 15.7.0 |
| 2020-03 | RAN#87 | R5s200221 | 0494 | 1 | B | Addition of EN-DC MAC test case 7.1.1.3.7 in FR2 | 15.7.0 |
| 2020-03 | RAN#87 | R5s200222 | 0495 | 1 | F | Correction of ENDC Intra Band Contiguous frequency initialisation for MAC TBS test cases | 15.7.0 |
| 2020-03 | RAN#87 | R5s200223 | 0682 | | F | Correction for function fl_Check_featureSetsUplinkPerCC | 15.7.0 |
| 2020-03 | RAN#87 | R5s200224 | 0683 | | F | Correction to template cs_38508_PCCH_Config | 15.7.0 |
| 2020-03 | RAN#87 | R5s200225 | 0496 | 1 | B | ENDC FR2 : Addition of NR MAC test case 7.1.1.2.1 | 15.7.0 |

| | | | | | | | |
|---|---|---|---|---|---|---|---|
| 2020-03 | RAN#87 | R5s200226 | 0497 | 1 | B | NR5GC FR1 : Addition of NR5GC/EUTRA Inter-RAT test case 8.1.3.2.1 | 15.7.0 |
| 2020-03 | RAN#87 | R5s200227 | 0503 | 1 | B | NR5GC FR1 : Addition of SDAP test case 7.1.4.1 | 15.7.0 |
| 2020-03 | RAN#87 | R5s200231 | 0508 | 1 | B | Addition of NR5GC test case 6.1.2.17 in FR1 | 15.7.0 |
| 2020-03 | RAN#87 | R5s200233 | 0521 | 1 | B | EN-DC FR1 : Addition of EN-DC RRC Measurement test case 8.2.3.6.1a | 15.7.0 |
| 2020-03 | RAN#87 | R5s200234 | 0522 | 1 | B | EN-DC FR1 : Addition of EN-DC RRC Measurement test case 8.2.3.7.1a | 15.7.0 |
| 2020-03 | RAN#87 | R5s200235 | 0524 | 1 | B | Addition of NR5GC test case 6.1.2.15 in FR1 | 15.7.0 |
| 2020-03 | RAN#87 | R5s200236 | 0526 | 1 | F | Correction to EN-DC common handover function | 15.7.0 |
| 2020-03 | RAN#87 | R5s200239 | 0527 | 1 | F | Correction to common NR5GC function f_NR_DRBInfo_RemoveEntry() | 15.7.0 |
| 2020-03 | RAN#87 | R5s200240 | 0529 | 1 | B | NR5GC FR1: Addition of NR RRC IDLE test case 6.1.2.12 | 15.7.0 |
| 2020-03 | RAN#87 | R5s200241 | 0531 | 1 | B | Addition of NR5GC test case 7.1.1.2.4 in FR1 | 15.7.0 |
| 2020-03 | RAN#87 | R5s200242 | 0535 | 1 | B | EN-DC FR1 : Addition of EN-DC RRC Measurement test case 8.2.3.6.1b | 15.7.0 |
| 2020-03 | RAN#87 | R5s200243 | 0536 | 1 | B | EN-DC FR1 : Addition of EN-DC RRC Measurement test case 8.2.3.7.1b | 15.7.0 |
| 2020-03 | RAN#87 | R5s200244 | 0538 | 1 | B | NR5GC FR1 : Addition of 5GMM test case 9.1.5.1.1 | 15.7.0 |
| 2020-03 | RAN#87 | R5s200245 | 0539 | 1 | F | Correction to NR test case 8.1.1.4.2 | 15.7.0 |
| 2020-03 | RAN#87 | R5s200246 | 0540 | 1 | B | EN-DC FR2 : Addition of NR RLC test case 7.1.2.2.5 | 15.7.0 |
| 2020-03 | RAN#87 | R5s200250 | 0685 | | F | Correction to ENDC testcase 7.1.2.3.7 | 15.7.0 |
| 2020-03 | RAN#87 | R5s200252 | 0546 | 1 | F | Corrections to EN-DC RRC test case 8.2.3.13.1 | 15.7.0 |
| 2020-03 | RAN#87 | R5s200253 | 0547 | 1 | F | Corrections to NR RLC test case 7.1.2.3.9 | 15.7.0 |
| 2020-03 | RAN#87 | R5s200254 | 0548 | 1 | F | Corrections to NR RLC test case 7.1.2.3.6 | 15.7.0 |
| 2020-03 | RAN#87 | R5s200255 | 0549 | 1 | F | Corrections for EN-DC measurements test cases | 15.7.0 |
| 2020-03 | RAN#87 | R5s200256 | 0552 | 1 | F | Correction to NR MAC test case 7.1.1.2.1 | 15.7.0 |
| 2020-03 | RAN#87 | R5s200257 | 0554 | 1 | F | Correction to NR MAC test case 7.1.1.3.2 | 15.7.0 |
| 2020-03 | RAN#87 | R5s200258 | 0565 | 1 | F | Correction for NR RLC test case 7.1.2.3.8 | 15.7.0 |
| 2020-03 | RAN#87 | R5s200259 | 0566 | 1 | F | Correction for EN-DC RRC test cases 8.2.3.3.1 | 15.7.0 |
| 2020-03 | RAN#87 | R5s200260 | 0568 | 1 | F | Correction to 5GMM test case 9.1.5.1.5 | 15.7.0 |
| 2020-03 | RAN#87 | R5s200261 | 0569 | 1 | F | Correction to the function f_NR5GC_RRC_Idle_Steps5_20 | 15.7.0 |
| 2020-03 | RAN#87 | R5s200262 | 0570 | 1 | F | Correction to NR RLC test cases 7.1.2.2.3 and 7.1.2.2.4 | 15.7.0 |
| 2020-03 | RAN#87 | R5s200263 | 0571 | 1 | F | Correction for EN-DC capability checking test case 8.2.1.1.1 | 15.7.0 |
| 2020-03 | RAN#87 | R5s200264 | 0575 | 1 | B | NR5GC FR1 : Addition of 5GMM test case 9.1.6.2.2 | 15.7.0 |
| 2020-03 | RAN#87 | R5s200265 | 0576 | 1 | F | Correction to NR5GC testcase 9.1.3.1 | 15.7.0 |
| 2020-03 | RAN#87 | R5s200266 | 0578 | 1 | F | Correction to the function f_NR_CellConfig_Def and template cas_NR_CellConfig_REQ | 15.7.0 |
| 2020-03 | RAN#87 | R5s200268 | 0580 | 1 | F | Corrections to NR MAC test case 7.1.1.1.2 | 15.7.0 |
| 2020-03 | RAN#87 | R5s200269 | 0581 | 1 | F | Corrections for NR5GC RRC test case 8.1.2.1.1 | 15.7.0 |
| 2020-03 | RAN#87 | R5s200270 | 0582 | 1 | F | Corrections for EN-DC preamble functions | 15.7.0 |

| | | | | | | | |
|---|---|---|---|---|---|---|---|
| | | | | | | | |

| | | | | | | | |
|---|---|---|---|---|---|---|---|
| 2020-03 | RAN#87 | R5s200271 | 0583 | 1 | F | Corrections for NR PDCP test cases 7.1.3.2.x and 7.1.3.3.x | 15.7.0 |
| 2020-03 | RAN#87 | R5s200276 | 0686 | - | F | Correction to the function f_NR_SkipMeasGap | 15.7.0 |
| 2020-03 | RAN#87 | R5s200277 | 0687 | - | F | Correction to the function fl_Check_Rf_Parameters_NRBand_PICS_Supp | 15.7.0 |
| 2020-03 | RAN#87 | R5s200281 | 0689 | - | B | Addition of NR5GC test case 6.1.2.7 in FR1 | 15.7.0 |
| 2020-03 | RAN#87 | R5s200283 | 0690 | - | B | Addition of NR5GC test case 6.1.2.16 in FR1 | 15.7.0 |
| 2020-03 | RAN#87 | R5s200287 | 0693 | - | B | Addition of NR5GC test case 6.1.2.4 in FR1 | 15.7.0 |
| 2020-03 | RAN#87 | R5s200288 | 0694 | - | F | Correction to the templates for EAP message | 15.7.0 |
| 2020-03 | RAN#87 | R5s200290 | 0695 | - | B | Addition of NR5GC test case 6.1.2.18 in FR1 | 15.7.0 |
| 2020-03 | RAN#87 | R5s200292 | 0696 | - | B | Addition of EN-DC RRC RSRQ Measurement test case 8.2.3.2.1 in FR1 | 15.7.0 |
| 2020-03 | RAN#87 | R5s200294 | 0697 | - | B | Addition of NR5GC test case 8.1.3.1.15a in FR1 | 15.7.0 |
| 2020-03 | RAN#87 | R5s200296 | 0698 | - | F | Correction to NR MAC test case 7.1.1.2.1 | 15.7.0 |
| 2020-03 | RAN#87 | R5s200313 | 0704 | - | B | EN-DC FR2 : Addition of NR RLC test case 7.1.2.3.5 | 15.7.0 |
| 2020-03 | RAN#87 | R5s200319 | 0707 | - | F | Correction to AM RLC test 7.1.2.3.7 | 15.7.0 |
| 2020-03 | RAN#87 | R5s200383 | 0741 | - | F | Add new verified and e-mail agreed TTCN test cases in the TC lists in 38.523-3 (prose), Annex A | 15.7.0 |
| 2020-03 | RAN#87 | R5s200386 | 0484 | 1 | F | Correction for EN-DC ESM test case 10.2.1.1 | 15.7.0 |
| 2020-03 | RAN#87 | R5s200387 | 0500 | 1 | B | NR5GC FR1 : Addition of NR PDCP test case 7.1.3.2.1 | 15.7.0 |
| 2020-03 | RAN#87 | R5s200389 | 0507 | 1 | F | Correction to Intra NR measurements test 8.1.3.1.1 | 15.7.0 |
| 2020-03 | RAN#87 | R5s200390 | 0509 | 1 | B | Addition of NR5GC test case 9.1.6.1.2 in FR1 | 15.7.0 |
| 2020-03 | RAN#87 | R5s200391 | 0511 | 1 | B | NR5GC FR1 : Addition of NR PDCP test case 7.1.3.2.2 | 15.7.0 |
| 2020-03 | RAN#87 | R5s200392 | 0512 | 1 | B | NR5GC FR1 : Addition of NR PDCP test case 7.1.3.2.3 | 15.7.0 |
| 2020-03 | RAN#87 | R5s200393 | 0513 | 1 | B | Addition of NR5GC IRAT test case 8.1.3.2.2 in FR1 | 15.7.0 |
| 2020-03 | RAN#87 | R5s200394 | 0532 | 1 | F | Correction to NR test case 7.1.2.3.6 | 15.7.0 |
| 2020-03 | RAN#87 | R5s200395 | 0567 | 1 | F | Correction to NR RLC test case 7.1.2.2.6 for EN-DC | 15.7.0 |
| 2020-03 | RAN#87 | R5s200396 | 0572 | 1 | F | Correction to NR PDCP test case 7.1.3.5.3 | 15.7.0 |
| 2020-03 | RAN#87 | R5s200397 | 0574 | 1 | B | NR5GC FR1 : Addition of NR Idle Mode test case 6.1.2.20 | 15.7.0 |
| 2020-03 | RAN#87 | R5s200398 | 0584 | 1 | B | NR5GC FR1 : Addition of 5GMM test case 9.1.5.1.2 | 15.7.0 |
| 2020-06 | RAN#88 | R5-202677 | 0940 | 1 | F | 5G Test Models updates | 15.8.0 |
| 2020-06 | RAN#88 | R5s200478 | 0800 | - | F | Correction to 5GMM test case 9.1.5.1.14 | 15.8.0 |
| 2020-06 | RAN#88 | R5s200479 | 0801 | - | F | Correction for upper tester function for AT+C5GPNSSAI | 15.8.0 |
| 2020-06 | RAN#88 | R5s200481 | 0803 | - | B | NR5GC FR1 : Addition of NR MAC test case 7.1.1.4.2.3 | 15.8.0 |
| 2020-06 | RAN#88 | R5s200482 | 0804 | - | F | Correction for function f_Get_PDUSessionIdForDNNType | 15.8.0 |
| 2020-06 | RAN#88 | R5s200485 | 0807 | - | F | Correction to EN-DC RRC measurement test cases 8.2.3.7.1x | 15.8.0 |
| 2020-06 | RAN#88 | R5s200489 | 0810 | - | F | Correction to NR5GC common functions when pc_noOf_PDUsNewConnection > 0 | 15.8.0 |
| 2020-06 | RAN#88 | R5s200491 | 0811 | - | F | Correction to EN-DC RRC test case 8.2.2.7.1 | 15.8.0 |
| 2020-06 | RAN#88 | R5s200492 | 0812 | - | B | NR5GC FR1 : Addition of RRC test case 8.1.1.3.3 | 15.8.0 |

| | | | | | | | |
|---|---|---|---|---|---|---|---|
| 2020-06 | RAN#88 | R5s200496 | 0813 | - | F | Correction for NR5GC RRC test case 8.1.1.3.1 | 15.8.0 |
| 2020-06 | RAN#88 | R5s200499 | 0815 | - | F | Correction for 5GMM test case 9.1.7.1 | 15.8.0 |
| 2020-06 | RAN#88 | R5s200501 | 0817 | - | F | Correction for upper tester function | 15.8.0 |
| 2020-06 | RAN#88 | R5s200504 | 0819 | - | F | Correction to NR Idle Mode test case 6.1.2.9 | 15.8.0 |
| 2020-06 | RAN#88 | R5s200506 | 0821 | - | F | Correction for EN-DC RRC test case 8.2.1.1.1 | 15.8.0 |
| 2020-06 | RAN#88 | R5s200509 | 0823 | - | B | NR5GC FR1 : Addition of NR5GC IRAT test case 8.1.4.2.1.1 | 15.8.0 |
| 2020-06 | RAN#88 | R5s200510 | 0824 | - | F | Correction for 5GMM test case 9.1.5.2.1 | 15.8.0 |
| 2020-06 | RAN#88 | R5s200511 | 0825 | - | F | Correction to NR MAC test case 7.1.1.3.4 | 15.8.0 |
| 2020-06 | RAN#88 | R5s200512 | 0826 | - | F | Correction for NR paging configuration | 15.8.0 |
| 2020-06 | RAN#88 | R5s200514 | 0828 | - | F | Corrections for NR PDCP test cases 7.1.3.3.x | 15.8.0 |
| 2020-06 | RAN#88 | R5s200516 | 0830 | - | B | EN-DC FR2 : Addition of NR PDCP test case 7.1.3.1.2 | 15.8.0 |
| 2020-06 | RAN#88 | R5s200517 | 0831 | - | F | Correction for NR5GC RRC test case 8.1.1.4.1 | 15.8.0 |
| 2020-06 | RAN#88 | R5s200518 | 0832 | - | F | Correction for NR5GC Idle Mode test case 6.1.2.4 | 15.8.0 |
| 2020-06 | RAN#88 | R5s200523 | 0837 | - | F | Correction for NR5GC RRC test case 9.1.2.2 | 15.8.0 |
| 2020-06 | RAN#88 | R5s200524 | 0838 | - | F | Correction for 5GMM test case 9.1.6.1.2 | 15.8.0 |
| 2020-06 | RAN#88 | R5s200526 | 0840 | - | F | Correction for NR MAC test cases 7.1.1.1.1 and 7.1.1.1.1a | 15.8.0 |
| 2020-06 | RAN#88 | R5s200527 | 0841 | - | F | Corrections for EN-DC measurement test cases 8.2.3.6.1x | 15.8.0 |
| 2020-06 | RAN#88 | R5s200529 | 0843 | - | F | Correction for NR RLC test cases 7.1.2.3.3 and 7.1.2.3.4 | 15.8.0 |
| 2020-06 | RAN#88 | R5s200530 | 0844 | - | F | Correction for NR RLC test cases 7.1.2.2.3 and 7.1.2.2.4 | 15.8.0 |
| 2020-06 | RAN#88 | R5s200533 | 0845 | - | F | NR/5GC FR1: Re-verification of test case 8.1.1.3.2 | 15.8.0 |
| 2020-06 | RAN#88 | R5s200537 | 0848 | - | F | Correction to NR Idle mode test case 6.4.2.1 | 15.8.0 |
| 2020-06 | RAN#88 | R5s200538 | 0849 | - | F | Correction to NR Idle Mode test case 6.1.2.18 | 15.8.0 |
| 2020-06 | RAN#88 | R5s200539 | 0850 | - | B | Addition of NR5GC test case 9.3.1.3 in FR1 | 15.8.0 |
| 2020-06 | RAN#88 | R5s200540 | 0851 | - | F | Corrections to testcase 7.1.2.3.7 | 15.8.0 |
| 2020-06 | RAN#88 | R5s200541 | 0852 | - | F | Corrections to NR5GC testcase 8.1.2.1.1 | 15.8.0 |
| 2020-06 | RAN#88 | R5s200542 | 0853 | - | F | Correction to functions f_NR_NRFullCapabilityCheck | 15.8.0 |
| 2020-06 | RAN#88 | R5s200543 | 0854 | - | F | Correction for NR5GC RRC test case 8.1.3.2.2 | 15.8.0 |
| 2020-06 | RAN#88 | R5s200544 | 0855 | - | F | Correction of function f_NR_Resourceallocation0_AllowedNPRB for Band n3 | 15.8.0 |
| 2020-06 | RAN#88 | R5s200545 | 0856 | - | F | Correction for slot offset calculation in f_NR_ShortMessageIndication_SysinfoMod | 15.8.0 |
| 2020-06 | RAN#88 | R5s200546 | 0857 | - | F | Correction to the function f_NR_ConvertSSB_IndexToBit | 15.8.0 |
| 2020-06 | RAN#88 | R5s200547 | 0858 | - | F | Correction to NR5GC test case 8.1.1.3.1 | 15.8.0 |
| 2020-06 | RAN#88 | R5s200548 | 0859 | - | F | Correction to the function f_Get_PDUSessionForDNNType | 15.8.0 |
| 2020-06 | RAN#88 | R5s200549 | 0860 | - | F | Correction to the template cads_NR_UplinkBWP_List_ConfigCommon_REQ | 15.8.0 |
| 2020-06 | RAN#88 | R5s200550 | 0861 | - | F | Correction to NR5GC test case 6.1.1.3 | 15.8.0 |
| 2020-06 | RAN#88 | R5s200551 | 0862 | - | F | Correction to NR5GC test case 7.1.1.1.3 | 15.8.0 |
| 2020-06 | RAN#88 | R5s200552 | 0863 | - | F | Correction to the template cs_NR_RachProcedureConfig_71116 | 15.8.0 |

| | | | | | | | |
|---|---|---|---|---|---|---|---|
| | | | | | | | |

| | | | | | | | |
|---|---|---|---|---|---|---|---|
| 2020-06 | RAN#88 | R5s200553 | 0864 | - | F | Correction to NR5GC test case 7.1.1.3.2 | 15.8.0 |
| 2020-06 | RAN#88 | R5s200554 | 0865 | - | F | Correction to NR5GC test case 7.1.1.2.1 | 15.8.0 |
| 2020-06 | RAN#88 | R5s200555 | 0866 | - | F | Correction to NR5GC test case 7.1.1.3.1 | 15.8.0 |
| 2020-06 | RAN#88 | R5s200556 | 0867 | - | F | Correction to NR5GC test case 7.1.1.1.1a | 15.8.0 |
| 2020-06 | RAN#88 | R5s200557 | 0868 | - | F | Correction to the function f_TC_7_1_3_2_X_NR_TestBody | 15.8.0 |
| 2020-06 | RAN#88 | R5s200558 | 0869 | - | F | Correction to the function f_NR_CellInfo_SetZeroCorrelationZoneConfig | 15.8.0 |
| 2020-06 | RAN#88 | R5s200559 | 0870 | - | F | Correction to NSA test case 10.2.2.1 | 15.8.0 |
| 2020-06 | RAN#88 | R5s200560 | 0871 | - | F | Correction to definition of EUTRA_PdnInfo_Type | 15.8.0 |
| 2020-06 | RAN#88 | R5s200561 | 0872 | - | F | Correction to NR5GC test case 9.1.6.1.3 | 15.8.0 |
| 2020-06 | RAN#88 | R5s200563 | 0874 | - | F | Correction to NR5GC test case 9.1.6.1.4 | 15.8.0 |
| 2020-06 | RAN#88 | R5s200564 | 0875 | - | F | NR/5GC FR1: Re-verification of IRAT test case 6.2.3.1 | 15.8.0 |
| 2020-06 | RAN#88 | R5s200566 | 0876 | - | F | NR/5GC FR1: Re-verification of IRAT test case 6.4.3.1 | 15.8.0 |
| 2020-06 | RAN#88 | R5s200570 | 0878 | - | F | EN-DC FR2: Re-verification of test case 8.2.2.8.1 | 15.8.0 |
| 2020-06 | RAN#88 | R5s200571 | 0879 | - | F | Corrections to NR5GC testcases 8.1.1.3.1 and 8.1.2.1.1 | 15.8.0 |
| 2020-06 | RAN#88 | R5s200573 | 0880 | - | B | NR5GC FR1 : Addition of 5GMM test case 9.1.4.1 | 15.8.0 |
| 2020-06 | RAN#88 | R5s200575 | 0882 | - | B | NR5GC FR1: Addition of Inter-band CA RRC test case 8.1.5.6.5.2 | 15.8.0 |
| 2020-06 | RAN#88 | R5s200577 | 0883 | - | B | EN-DC FR1 : Addition of NR MAC test case 7.1.1.4.2.1 | 15.8.0 |
| 2020-06 | RAN#88 | R5s200579 | 0884 | - | B | NR5GC FR1: Addition of Intra-band contiguous CA RRC test case 8.1.5.6.5.1 | 15.8.0 |
| 2020-06 | RAN#88 | R5s200582 | 0885 | - | F | Correction to NR5GC test case 8.1.3.1.15a | 15.8.0 |
| 2020-06 | RAN#88 | R5s200583 | 0886 | - | F | NR/5GC FR1: Re-verification of IRAT test case 6.2.3.3 | 15.8.0 |
| 2020-06 | RAN#88 | R5s200585 | 0887 | - | B | Addition of NR5GC test case 10.1.3.2 in FR1 | 15.8.0 |
| 2020-06 | RAN#88 | R5s200587 | 0888 | - | B | Addition of NR5GC test case 9.1.7.2 in FR1 | 15.8.0 |
| 2020-06 | RAN#88 | R5s200589 | 0889 | - | B | Addition of NR5GC test case 9.1.2.3 in FR1 | 15.8.0 |
| 2020-06 | RAN#88 | R5s200591 | 0890 | - | B | Addition of NR5GC test case 9.1.2.4 in FR1 | 15.8.0 |
| 2020-06 | RAN#88 | R5s200593 | 0891 | - | B | Addition of NR5GC test case 9.1.2.5 in FR1 | 15.8.0 |
| 2020-06 | RAN#88 | R5s200597 | 0893 | - | B | Addition of NR5GC test case 9.1.2.7 in FR1 | 15.8.0 |
| 2020-06 | RAN#88 | R5s200601 | 0895 | - | B | Addition of NR5GC test case 6.2.3.7 in FR1 | 15.8.0 |
| 2020-06 | RAN#88 | R5s200603 | 0896 | - | B | Addition of NR5GC test case 6.1.2.19 in FR1 | 15.8.0 |
| 2020-06 | RAN#88 | R5s200605 | 0897 | - | B | ENDC FR1: Addition of Intra-band contiguous CA RRC test case 8.2.4.1.1.1 | 15.8.0 |
| 2020-06 | RAN#88 | R5s200607 | 0898 | - | B | Addition of NR5GC test case 6.2.3.9 in FR1 | 15.8.0 |
| 2020-06 | RAN#88 | R5s200610 | 0900 | - | B | NR5GC FR1 : Addition of NR Idle Mode test case 6.1.2.8 | 15.8.0 |
| 2020-06 | RAN#88 | R5s200612 | 0902 | - | F | Correction to EN-DC RRC measurement test cases | 15.8.0 |
| 2020-06 | RAN#88 | R5s200614 | 0904 | - | B | NR5GC FR1 : Addition of 5GMM test case 9.1.2.6 | 15.8.0 |
| 2020-06 | RAN#88 | R5s200617 | 0905 | - | B | NR5GC FR1 : Addition of 5GMM test case 9.1.2.8 | 15.8.0 |
| 2020-06 | RAN#88 | R5s200619 | 0906 | - | B | NR5GC FR1 : Addition of NR5GC RRC test case 8.1.5.3.4 | 15.8.0 |
| 2020-06 | RAN#88 | R5s200622 | 0907 | - | B | Addition of NR5GC test case 8.1.3.3.1 in FR1 | 15.8.0 |

| | | | | | | | |
|---|---|---|---|---|---|---|---|
| | | | | | | | |

| | | | | | | | |
|---|---|---|---|---|---|---|---|
| 2020-06 | RAN#88 | R5s200624 | 0908 | - | B | ENDC FR1: Addition of Inter band CA RRC test case 8.2.4.1.1.3 | 15.8.0 |
| 2020-06 | RAN#88 | R5s200626 | 0909 | - | F | Corrections to ENDC CA band combinations | 15.8.0 |
| 2020-06 | RAN#88 | R5s200627 | 0910 | - | F | Corrections to NR5GC testcase 9.1.5.1.3a | 15.8.0 |
| 2020-06 | RAN#88 | R5s200628 | 0911 | - | B | Addition of NR5GC test case 9.3.1.1 in FR1 | 15.8.0 |
| 2020-06 | RAN#88 | R5s200630 | 0912 | - | B | NR5GC FR1 : Addition of NR5GC RRC test case 8.1.5.4.1 | 15.8.0 |
| 2020-06 | RAN#88 | R5s200633 | 0914 | - | B | Addition of NR5GC test case 6.1.2.14 in FR1 | 15.8.0 |
| 2020-06 | RAN#88 | R5s200635 | 0915 | - | B | Addition of NR5GC test case 6.1.2.13 in FR1 | 15.8.0 |
| 2020-06 | RAN#88 | R5s200638 | 0917 | - | B | Addition of NR5GC test case 6.4.1.2 in FR1 | 15.8.0 |
| 2020-06 | RAN#88 | R5s200644 | 0919 | - | F | Correction to EN-DC RRC test case 8.2.1.1.1 | 15.8.0 |
| 2020-06 | RAN#88 | R5s200647 | 0922 | - | F | Correction to common ENDC function for security key exchange | 15.8.0 |
| 2020-06 | RAN#88 | R5s200648 | 0923 | - | B | Addition of NR5GC test case 6.2.1.1 in FR1 | 15.8.0 |
| 2020-06 | RAN#88 | R5s200650 | 0924 | - | B | Addition of EN-DC RRC test case 8.2.2.6.1 in FR1 | 15.8.0 |
| 2020-06 | RAN#88 | R5s200651 | 0925 | - | B | Addition of EN-DC RRC test case 8.2.2.6.1 in FR2 | 15.8.0 |
| 2020-06 | RAN#88 | R5s200657 | 0929 | - | B | Addition of NR5GC test case 6.4.1.1 in FR1 | 15.8.0 |
| 2020-06 | RAN#88 | R5s200659 | 0930 | - | B | Addition of NR5GC test case 6.2.1.2 in FR1 | 15.8.0 |
| 2020-06 | RAN#88 | R5s200661 | 0931 | - | F | Correction to multiPDN in EN-DC tests | 15.8.0 |
| 2020-06 | RAN#88 | R5s200662 | 0932 | - | F | Correction to test case 9.1.7.1 | 15.8.0 |
| 2020-06 | RAN#88 | R5s200663 | 0933 | - | B | Addition of NR5GC test case 6.3.1.1 in FR1 | 15.8.0 |
| 2020-06 | RAN#88 | R5s200666 | 0935 | - | B | EN-DC FR1 : Addition of RRC test case 8.2.6.2.1 | 15.8.0 |
| 2020-06 | RAN#88 | R5s200672 | 0939 | - | B | Addition of NR5GC test case 6.3.1.2 in FR1 | 15.8.0 |
| 2020-06 | RAN#88 | R5s200676 | 0942 | - | F | Correction to template cas_NR_SRB_NasPdu_REQ | 15.8.0 |
| 2020-06 | RAN#88 | R5s200677 | 0943 | - | F | Correction to NR5GC test case 9.1.7.1 | 15.8.0 |
| 2020-06 | RAN#88 | R5s200680 | 0945 | - | B | Addition of NR5GC test case 6.3.1.3 in FR1 | 15.8.0 |
| 2020-06 | RAN#88 | R5s200682 | 0946 | - | B | Addition of NR5GC test case 6.3.1.4 in FR1 | 15.8.0 |
| 2020-06 | RAN#88 | R5s200684 | 0947 | - | B | ENDC FR2: Addition of EN-DC RRC measurement test case 8.2.3.6.1a | 15.8.0 |
| 2020-06 | RAN#88 | R5s200686 | 0948 | - | B | ENDC FR2: Addition of EN-DC RRC measurement test case 8.2.3.7.1a | 15.8.0 |
| 2020-06 | RAN#88 | R5s200688 | 0949 | - | B | ENDC FR2: Addition of EN-DC RRC measurement test case 8.2.3.8.1a | 15.8.0 |
| 2020-06 | RAN#88 | R5s200690 | 0950 | - | B | NR5GC FR1: Addition of NR PDCP test case 7.1.3.4.1 | 15.8.0 |
| 2020-06 | RAN#88 | R5s200696 | 0953 | - | F | Correction to the function f_NR_ENDC_ReConfigAM_UM | 15.8.0 |
| 2020-06 | RAN#88 | R5s200697 | 0954 | - | F | Correction to NR5GC test case 10.1.1.2 | 15.8.0 |
| 2020-06 | RAN#88 | R5s200701 | 0956 | - | F | Correction to the template cs_NR_PDCP_Config_UlPath | 15.8.0 |
| 2020-06 | RAN#88 | R5s200703 | 0958 | - | B | NR5GC FR1 : Addition of NR5GC PWS test case 8.1.5.3.1 | 15.8.0 |
| 2020-06 | RAN#88 | R5s200705 | 0959 | - | B | NR5GC FR1 : Addition of NR5GC PWS test case 8.1.5.3.2 | 15.8.0 |
| 2020-06 | RAN#88 | R5s200707 | 0960 | - | B | NR5GC FR1 : Addition of NR5GC PWS test case 8.1.5.3.3 | 15.8.0 |
| 2020-06 | RAN#88 | R5s200709 | 0961 | - | F | Correction to NR5GC test case 6.1.1.8 | 15.8.0 |
| 2020-06 | RAN#88 | R5s200710 | 0962 | - | F | Correction to NR5GC/ENDC test case 7.1.2.3.8 | 15.8.0 |

| | | | | | | | |
|---|---|---|---|---|---|---|---|
| | | | | | | | |

| | | | | | | | |
|---|---|---|---|---|---|---|---|
| 2020-06 | RAN#88 | R5s200715 | 0966 | - | F | Correction for SDAP test case 7.1.4.2 | 15.8.0 |
| 2020-06 | RAN#88 | R5s200716 | 0967 | - | F | Correction to 5GMM test case 9.1.7.2 | 15.8.0 |
| 2020-06 | RAN#88 | R5s200717 | 0968 | - | B | NR5GC FR1 : Addition of RRC CA test case 8.1.3.1.17.1 | 15.8.0 |
| 2020-06 | RAN#88 | R5s200719 | 0969 | - | B | NR5GC FR1 : Addition of RRC CA test case 8.1.3.1.17.2 | 15.8.0 |
| 2020-06 | RAN#88 | R5s200721 | 0970 | - | B | Addition of NR5GC IRAT test case 6.2.3.2 in FR1 | 15.8.0 |
| 2020-06 | RAN#88 | R5s200723 | 0971 | - | B | Addition of NR5GC IRAT test case 6.2.3.4 in FR1 | 15.8.0 |
| 2020-06 | RAN#88 | R5s200725 | 0972 | - | B | Addition of NR5GC IRAT test case 8.1.3.2.3 in FR1 | 15.8.0 |
| 2020-06 | RAN#88 | R5s200727 | 0973 | - | B | Addition of NR5GC IRAT test case 8.1.3.2.4 in FR1 | 15.8.0 |
| 2020-06 | RAN#88 | R5s200729 | 0974 | - | B | Addition of NR5GC test case 11.3.3 in FR1 | 15.8.0 |
| 2020-06 | RAN#88 | R5s200731 | 0975 | - | F | Correction to NR5GC test case 6.1.2.7 | 15.8.0 |
| 2020-06 | RAN#88 | R5s200732 | 0976 | - | F | Correction to f_EUTRA38_IRAT_NAS_Init | 15.8.0 |
| 2020-06 | RAN#88 | R5s200733 | 0977 | - | F | Correction to NR5GC RRC test case 8.1.5.4.1 | 15.8.0 |
| 2020-06 | RAN#88 | R5s200734 | 0978 | - | B | NR5GC FR1 : Addition of RRC CA test case 8.1.3.1.18.1 | 15.8.0 |
| 2020-06 | RAN#88 | R5s200736 | 0979 | - | B | NR5GC FR1 : Addition of RRC CA test case 8.1.3.1.18.2 | 15.8.0 |
| 2020-06 | RAN#88 | R5s200738 | 0980 | - | F | Correction to NR5GC test case 10.1.1.1 | 15.8.0 |
| 2020-06 | RAN#88 | R5s200744 | 0983 | - | F | Correction to NR5GC test case 8.2.3.2.1 | 15.8.0 |
| 2020-06 | RAN#88 | R5s200747 | 0985 | - | B | EN-DC FR2 : Addition of NR MAC test case 7.1.1.3.3 | 15.8.0 |
| 2020-06 | RAN#88 | R5s200750 | 0987 | - | F | Correction to 5GSM test case 9.1.7.1 | 15.8.0 |
| 2020-06 | RAN#88 | R5s200752 | 0989 | - | F | Correction to the NR5GC testcase 6.1.2.1 | 15.8.0 |
| 2020-06 | RAN#88 | R5s200753 | 0990 | - | F | Correction to the ENDC testcase 7.1.1.3.7 | 15.8.0 |
| 2020-06 | RAN#88 | R5s200754 | 0991 | - | F | Correction to NR5GC function f_NR5GC_508RRC_IntraNR_HO_IntraCell_Step1_8 | 15.8.0 |
| 2020-06 | RAN#88 | R5s200755 | 0992 | - | F | Correction to NR RLC testcase 7.1.2.2.6 | 15.8.0 |
| 2020-06 | RAN#88 | R5s200756 | 0993 | - | F | Correction to the NR5GC testcase 9.1.5.1.2 | 15.8.0 |
| 2020-06 | RAN#88 | R5s200757 | 0994 | - | F | Correction to the NR5GC testcase 9.1.7.2 | 15.8.0 |
| 2020-06 | RAN#88 | R5s200758 | 0995 | - | B | Addition of NR5GC test case 9.1.5.1.3 in FR1 | 15.8.0 |
| 2020-06 | RAN#88 | R5s200762 | 0515 | 1 | B | Addition of NR5GC IRAT test case 6.2.3.1 in FR1 | 15.8.0 |
| 2020-06 | RAN#88 | R5s200763 | 0641 | 1 | F | Correction to NR5GC RRC test case 8.1.1.2.1 | 15.8.0 |
| 2020-06 | RAN#88 | R5s200764 | 0688 | 1 | B | Addition of NR5GC test case 8.1.2.1.2 | 15.8.0 |
| 2020-06 | RAN#88 | R5s200765 | 0699 | 1 | B | NR5GC FR1 : Addition of 5GMM test case 9.1.5.1.14 | 15.8.0 |
| 2020-06 | RAN#88 | R5s200766 | 0702 | 1 | B | NR5GC FR1 : Addition of NR5GC RRC test case 8.1.4.1.2 | 15.8.0 |
| 2020-06 | RAN#88 | R5s200769 | 0708 | 1 | B | EN-DC FR2 : Addition of EN-DC RRC test case 8.2.3.8.1 | 15.8.0 |
| 2020-06 | RAN#88 | R5s200770 | 0711 | 1 | B | NR5GC FR1 : Addition of 5GMM test case 9.1.5.2.1 | 15.8.0 |
| 2020-06 | RAN#88 | R5s200772 | 0999 | | B | Addition of NR5GC test case 6.2.1.4 in FR1 | 15.8.0 |
| 2020-06 | RAN#88 | R5s200774 | 0714 | 1 | F | Correction of function fl_Check_featureSetsUplinkPerCC | 15.8.0 |
| 2020-06 | RAN#88 | R5s200775 | 0715 | 1 | F | Correction for NR PDCP test case 7.1.3.5.2 | 15.8.0 |
| 2020-06 | RAN#88 | R5s200776 | 0716 | 1 | B | NR5GC FR1 : Addition of 5GMM test case 9.1.5.1.3a | 15.8.0 |
| 2020-06 | RAN#88 | R5s200777 | 0717 | 1 | F | Correction to NR5GC RRC test case 8.1.2.1.1 | 15.8.0 |

| | | | | | | | |
|---|---|---|---|---|---|---|---|
| 2020-06 | RAN#88 | R5s200778 | 0718 | 1 | F | Correction to ENDC RRC test case 8.2.3.13.1 | 15.8.0 |
| 2020-06 | RAN#88 | R5s200779 | 0719 | 1 | B | Addition of NR5GC test case 6.1.1.8 in FR1 | 15.8.0 |
| 2020-06 | RAN#88 | R5s200780 | 0725 | 1 | B | Addition of NR5GC IRAT test case 6.2.3.5 in FR1 | 15.8.0 |
| 2020-06 | RAN#88 | R5s200781 | 0726 | 1 | B | Addition of NR5GC IRAT test case 6.2.3.6 in FR1 | 15.8.0 |
| 2020-06 | RAN#88 | R5s200784 | 0730 | 1 | B | Addition of NR5GC test case 6.1.2.22 in FR1 | 15.8.0 |
| 2020-06 | RAN#88 | R5s200785 | 0731 | 1 | F | Correction to function fl_NR_InitSIB4_FreqInfoList() | 15.8.0 |
| 2020-06 | RAN#88 | R5s200786 | 0732 | 1 | F | Correction to function f_EUTRA38_NR_Capability() | 15.8.0 |
| 2020-06 | RAN#88 | R5s200787 | 0733 | 1 | F | Correction to NR Idle Mode test case 6.1.2.7 | 15.8.0 |
| 2020-06 | RAN#88 | R5s200788 | 0734 | 1 | F | Correction to NR5GC RRC test case 8.1.1.2.1 | 15.8.0 |
| 2020-06 | RAN#88 | R5s200789 | 0736 | 1 | B | Addition of NR5GC test case 9.1.1.3 in FR1 | 15.8.0 |
| 2020-06 | RAN#88 | R5s200790 | 0737 | 1 | B | Addition of NR5GC IRAT test case 6.2.3.8 in FR1 | 15.8.0 |
| 2020-06 | RAN#88 | R5s200791 | 0738 | 1 | B | Addition of NR5GC test case 6.4.2.1 in FR1 | 15.8.0 |
| 2020-06 | RAN#88 | R5s200792 | 0739 | 1 | B | Addition of NR5GC IRAT test case 9.3.1.2 in FR1 | 15.8.0 |
| 2020-06 | RAN#88 | R5s200793 | 0742 | 1 | B | Addition of NR5GC test case 10.1.1.1 in FR1 | 15.8.0 |
| 2020-06 | RAN#88 | R5s200794 | 0743 | 1 | B | Addition of NR5GC test case 10.1.1.2 in FR1 | 15.8.0 |
| 2020-06 | RAN#88 | R5s200795 | 0753 | 1 | F | Correction for NR5GC common function f_BuildRRCReconfigParamsNewDRBs() | 15.8.0 |
| 2020-06 | RAN#88 | R5s200796 | 0757 | 1 | F | Corrections for EUTRA registration procedure | 15.8.0 |
| 2020-06 | RAN#88 | R5s200798 | 1001 | - | F | Correction to NR5GC testcase 9.3.1.2 | 15.8.0 |
| 2020-06 | RAN#88 | R5s200799 | 0759 | 1 | B | EN-DC FR1 : Addition of EN-DC RRC measurement test case 8.2.3.8.1a | 15.8.0 |
| 2020-06 | RAN#88 | R5s200800 | 0760 | 1 | B | EN-DC FR1 : Addition of EN-DC RRC measurement test case 8.2.3.8.1b | 15.8.0 |
| 2020-06 | RAN#88 | R5s200801 | 0767 | 1 | F | Correction for 5GC registration | 15.8.0 |
| 2020-06 | RAN#88 | R5s200802 | 0768 | 1 | F | Correction for NR5GC Idle Mode test cases using SIB3 | 15.8.0 |
| 2020-06 | RAN#88 | R5s200803 | 0771 | 1 | F | Correction for NR grant assignment | 15.8.0 |
| 2020-06 | RAN#88 | R5s200804 | 0776 | 1 | B | NR5GC FR1 : Addition of 5GMM test case 9.1.1.6 | 15.8.0 |
| 2020-06 | RAN#88 | R5s200805 | 0781 | 1 | F | Correction for common ENDC handover function | 15.8.0 |
| 2020-06 | RAN#88 | R5s200806 | 0786 | 1 | F | Corrections to test frequencies for Intra-band Contiguous NR CA | 15.8.0 |
| 2020-06 | RAN#88 | R5s200807 | 0789 | 1 | F | Correction for NR5GC authentication function | 15.8.0 |
| 2020-06 | RAN#88 | R5s200808 | 0792 | 1 | F | Correction for common NR5GC configuration function() | 15.8.0 |
| 2020-06 | RAN#88 | R5s200809 | 0797 | 1 | F | Correction to function f_GetLastConfiguredInternetPDUSessionID | 15.8.0 |
| 2020-06 | RAN#88 | R5s200817 | 1006 | - | F | Correction to NR5GC test case 6.4.3.1 | 15.8.0 |
| 2020-06 | RAN#88 | R5s200818 | 1007 | - | F | Update to Configuration and Activation of VNG | 15.8.0 |
| 2020-06 | RAN#88 | R5s200819 | 1008 | - | F | Correction to NR5GC test case 9.1.6.1.2 | 15.8.0 |
| 2020-06 | RAN#88 | R5s200823 | 1009 | - | B | EN-DC FR2 : Addition of NR MAC test case 7.1.1.1.2 | 15.8.0 |
| 2020-06 | RAN#88 | R5s200839 | 0706 | 1 | B | Addition of EN-DC RRC test case 8.2.2.8.1 in FR2 | 15.8.0 |
| 2020-06 | RAN#88 | R5s200841 | 0721 | 1 | B | Addition of NR5GC test case 8.1.3.3.2 in FR1 | 15.8.0 |
| 2020-06 | RAN#88 | R5s200842 | 0723 | 1 | B | Addition of NR5GC test case 9.1.6.1.3 in FR1 | 15.8.0 |

| | | | | | | | |
|---|---|---|---|---|---|---|---|
| | | | | | | | |

| | | | | | | | |
|---|---|---|---|---|---|---|---|
| 2020-06 | RAN#88 | R5s200844 | 0740 | 1 | B | NR5GC FR1 : Addition of NR Idle Mode test case 6.1.2.5 | 15.8.0 |
| 2020-06 | RAN#88 | R5s200845 | 0744 | 1 | B | NR5GC FR1 : Addition of NR Idle Mode test case 6.4.2.2 | 15.8.0 |
| 2020-06 | RAN#88 | R5s200846 | 0748 | 1 | F | Correction to EN-DC RRC Measurement tests 8.2.3.1.1 and 8.2.3.3.1 | 15.8.0 |
| 2020-06 | RAN#88 | R5s200847 | 0755 | 1 | B | EN-DC FR1 : Addition of RRC test case 8.2.2.1.1 | 15.8.0 |
| 2020-06 | RAN#88 | R5s200848 | 0758 | 1 | B | EN-DC FR2 : Addition of RRC test case 8.2.2.1.1 | 15.8.0 |
| 2020-06 | RAN#88 | R5s200849 | 0787 | 1 | B | ENDC FR2: Addition of Intra-band Contiguous CA RRC test case 8.2.4.1.1.1 | 15.8.0 |
| 2020-06 | RAN#88 | R5s200850 | 0793 | 1 | F | Correction for common NR rounding function() | 15.8.0 |
| 2020-06 | RAN#88 | R5s200851 | 0796 | 1 | B | Addition of NR5GC test case 8.1.3.1.16 in FR1 | 15.8.0 |
| 2020-06 | RAN#88 | R5s200911 | 0691 | 1 | B | Addition of NR5GC test case 8.1.1.3.2 in FR1 | 15.8.0 |
| 2020-06 | RAN#88 | R5s200912 | 0703 | 1 | B | NR5GC FR1 : Addition of 5GMM SMS over NAS test case 9.1.8.1 | 15.8.0 |
| 2020-06 | RAN#88 | R5s200913 | 0749 | 1 | B | EN-DC FR2 : Addition of NR MAC test case 7.1.1.3.1 | 15.8.0 |
| 2020-06 | RAN#88 | R5s200915 | 1057 | - | F | Add new verified and e-mail agreed TTCN test cases in the TC lists in 38.523-3 (prose), Annex A | 15.8.0 |
| 2020-06 | RAN#88 | R5s200918 | 0516 | 1 | B | Addition of NR5GC test case 6.4.3.1 in FR1 | 15.8.0 |
| 2020-06 | RAN#88 | R5s200919 | 0534 | 1 | B | NR5GC FR1 : Addition of NR5GC inter-RAT test case 6.2.3.3 | 15.8.0 |
| 2020-06 | RAN#88 | R5s200920 | 0541 | 1 | B | NR5GC FR1: Addition of NR RLC test case 7.1.2.3.11 | 15.8.0 |
| 2020-09 | RAN#89 | R5s201000 | 1125 | - | F | Correction for NR5GC idle mode test case 6.4.2.1 | 15.9.0 |
| 2020-09 | RAN#89 | R5s201004 | 1129 | - | F | Corrections for NR5GC IRAT Idle mde test cases | 15.9.0 |
| 2020-09 | RAN#89 | R5s201007 | 1132 | - | F | Correction to NR MAC test case 7.1.1.3.5 | 15.9.0 |
| 2020-09 | RAN#89 | R5s201010 | 1135 | - | F | Correction for NR RLC test cases 7.1.2.3.6 and 7.1.2.3.8 in EN-DC operation | 15.9.0 |
| 2020-09 | RAN#89 | R5s201011 | 1136 | - | F | Corrections for NR5GC idle mode test case 6.4.1.2 | 15.9.0 |
| 2020-09 | RAN#89 | R5s201012 | 1137 | - | F | Correction to NR MAC test case 7.1.1.3.1 | 15.9.0 |
| 2020-09 | RAN#89 | R5s201013 | 1138 | - | F | Correction to ENDC testcase 8.2.3.2.1 | 15.9.0 |
| 2020-09 | RAN#89 | R5s201015 | 1139 | - | F | NR5GC FR1 : Re-verification of NR Idle Mode test case 6.1.2.11 | 15.9.0 |
| 2020-09 | RAN#89 | R5s201017 | 1140 | - | F | Correction to ENDC testcase 8.2.3.12.1 | 15.9.0 |
| 2020-09 | RAN#89 | R5s201018 | 1141 | - | F | Correction to NR5GC IRAT test case 8.1.3.2.4 | 15.9.0 |
| 2020-09 | RAN#89 | R5s201019 | 1142 | - | F | Correction to NR PDCP test case 7.1.3.4.1 | 15.9.0 |
| 2020-09 | RAN#89 | R5s201020 | 1143 | - | F | Correction to function f_ExtendedEAPAKA_PRF | 15.9.0 |
| 2020-09 | RAN#89 | R5s201021 | 1144 | - | B | Addition of NR5GC test case 9.1.1.1 in FR1 | 15.9.0 |
| 2020-09 | RAN#89 | R5s201022 | 1145 | - | F | Correction to NR MAC test case 7.1.1.1.1a | 15.9.0 |
| 2020-09 | RAN#89 | R5s201023 | 1146 | - | F | Correction to EN-DC RRC test case 8.2.3.3.1 | 15.9.0 |
| 2020-09 | RAN#89 | R5s201025 | 1147 | - | B | Addition of NR5GC test case 9.1.1.2 in FR1 | 15.9.0 |
| 2020-09 | RAN#89 | R5s201028 | 1149 | - | B | Addition of NR5GC test case 10.1.4.1 in FR1 | 15.9.0 |
| 2020-09 | RAN#89 | R5s201030 | 1150 | - | F | Correction to NR5GC test case 11.3.4 | 15.9.0 |
| 2020-09 | RAN#89 | R5s201031 | 1151 | - | F | Correction to NR5GC test case 6.1.2.14 | 15.9.0 |
| 2020-09 | RAN#89 | R5s201032 | 1152 | - | F | Correction to NR5GC test case 9.1.5.2.9 | 15.9.0 |

| | | | | | | | |
|---|---|---|---|---|---|---|---|
| 2020-09 | RAN#89 | R5s201034 | 1154 | - | F | Correction to NR5GC test case 9.1.5.2.6 | 15.9.0 |
| 2020-09 | RAN#89 | R5s201035 | 1155 | - | F | Correction to NR5GC testcase 8.1.1.3.2 | 15.9.0 |
| 2020-09 | RAN#89 | R5s201036 | 1156 | - | F | Correction to NR MAC test case 7.1.1.4.2.3 | 15.9.0 |
| 2020-09 | RAN#89 | R5s201037 | 1157 | - | F | Correction to NR idle mode test case 6.1.2.19 | 15.9.0 |
| 2020-09 | RAN#89 | R5s201038 | 1158 | - | F | Correction to NR MAC test case 7.1.1.2.4 | 15.9.0 |
| 2020-09 | RAN#89 | R5s201039 | 1159 | - | F | EN-DC FR1 : Re-verification of NR MAC test case 7.1.1.5.1 | 15.9.0 |
| 2020-09 | RAN#89 | R5s201041 | 1160 | - | F | EN-DC FR2 : Re-verification of NR MAC test case 7.1.1.5.1 | 15.9.0 |
| 2020-09 | RAN#89 | R5s201043 | 1161 | - | F | Correction to NR5GC test case 6.3.1.1 | 15.9.0 |
| 2020-09 | RAN#89 | R5s201044 | 1162 | - | F | Correction to NR5GC test case 6.3.1.2 | 15.9.0 |
| 2020-09 | RAN#89 | R5s201045 | 1163 | - | F | Correction to NR5GC test case 6.2.1.4 | 15.9.0 |
| 2020-09 | RAN#89 | R5s201046 | 1164 | - | F | Correction to NR5GC test case 6.2.3.9 | 15.9.0 |
| 2020-09 | RAN#89 | R5s201047 | 1165 | - | F | Correction to NR5GC test case 6.4.1.1 | 15.9.0 |
| 2020-09 | RAN#89 | R5s201049 | 1167 | - | F | Correction to NR5GC test case 9.1.2.1 | 15.9.0 |
| 2020-09 | RAN#89 | R5s201052 | 1170 | - | F | Correction to the NR5GC testcase 9.1.7.1 | 15.9.0 |
| 2020-09 | RAN#89 | R5s201053 | 1171 | - | F | Correction to the NR5GC testcase 7.1.1.5.3 | 15.9.0 |
| 2020-09 | RAN#89 | R5s201054 | 1172 | - | B | NR5GC FR1 : Addition of NR5GC IRAT test case 6.2.1.3 | 15.9.0 |
| 2020-09 | RAN#89 | R5s201060 | 1175 | - | F | Correction to NR5GC IRAT test case 8.1.5.5.1 | 15.9.0 |
| 2020-09 | RAN#89 | R5s201061 | 1176 | - | F | Correction to 5GMM test case 9.1.2.1 | 15.9.0 |
| 2020-09 | RAN#89 | R5s201062 | 1177 | - | F | Correction to NR5GC IRAT test case 8.1.1.3.4 | 15.9.0 |
| 2020-09 | RAN#89 | R5s201063 | 1178 | - | F | Correction to 5GSM test case 10.1.6.1 | 15.9.0 |
| 2020-09 | RAN#89 | R5s201065 | 1180 | - | F | Correction to the ENDC testcase 7.1.1.3.5 | 15.9.0 |
| 2020-09 | RAN#89 | R5s201066 | 1181 | - | F | Correction to NR5GC testcase 9.1.4.1 | 15.9.0 |
| 2020-09 | RAN#89 | R5s201067 | 1182 | - | F | Correction to NR5GC testcase 6.2.1.5 | 15.9.0 |
| 2020-09 | RAN#89 | R5s201072 | 1186 | - | F | Correction for NR MAC test case 7.1.1.5.3 | 15.9.0 |
| 2020-09 | RAN#89 | R5s201076 | 1189 | - | F | Correction to NR5GC IRAT test case 8.1.4.1.2 | 15.9.0 |
| 2020-09 | RAN#89 | R5s201077 | 1190 | - | F | Corrections for NR5GC RRC test case 8.1.5.3.4 | 15.9.0 |
| 2020-09 | RAN#89 | R5s201079 | 1192 | - | F | Correction for NR5GC IRAT measurement test cases | 15.9.0 |
| 2020-09 | RAN#89 | R5s201080 | 1193 | - | B | EN-DC FR1 : Addition of EN-DC RRC test case 8.2.3.16.1 | 15.9.0 |
| 2020-09 | RAN#89 | R5s201082 | 1194 | - | F | Correction to NR5GC idle mode test case 6.1.1.4 | 15.9.0 |
| 2020-09 | RAN#89 | R5s201085 | 1196 | - | B | EN-DC FR2 : Addition of EN-DC RRC test case 8.2.3.16.1 | 15.9.0 |
| 2020-09 | RAN#89 | R5s201090 | 1198 | - | B | NR5GC FR1: Addition of NR5GC CA test case 8.1.3.1.17.3 | 15.9.0 |
| 2020-09 | RAN#89 | R5s201091 | 1199 | - | B | NR5GC FR1: Addition of NR5GC CA test case 8.1.5.6.5.3 | 15.9.0 |
| 2020-09 | RAN#89 | R5s201096 | 1202 | - | F | Correction for NR idle mode test case 6.2.1.4 | 15.9.0 |
| 2020-09 | RAN#89 | R5s201098 | 1204 | - | F | Correction for RRCResume in NR5GC test cases | 15.9.0 |
| 2020-09 | RAN#89 | R5s201099 | 1205 | - | F | Corrections for NR5GC RRC test case 8.1.3.1.16 | 15.9.0 |
| 2020-09 | RAN#89 | R5s201102 | 1208 | - | F | Correction to NR5GC function f_EUTRA38_NR_AdditionalProtocolConfigOptions | 15.9.0 |
| 2020-09 | RAN#89 | R5s201103 | 1209 | - | F | Correction for PDCP test case 7.1.3.1.2 | 15.9.0 |

| | | | | | | | |
|---|---|---|---|---|---|---|---|
| 2020-09 | RAN#89 | R5s201106 | 1212 | - | F | Correction for NR inter-frequency test cases | 15.9.0 |
| 2020-09 | RAN#89 | R5s201111 | 1215 | - | F | Correction for NR5GC IRAT test case 8.1.3.2.3 | 15.9.0 |
| 2020-09 | RAN#89 | R5s201112 | 1216 | - | F | Correction to NR5GC testcase 6.4.2.2 | 15.9.0 |
| 2020-09 | RAN#89 | R5s201113 | 1217 | - | F | Correction to NR5GC testcase 9.1.5.1.8 | 15.9.0 |
| 2020-09 | RAN#89 | R5s201115 | 1219 | - | F | Correction to ENDC test case 8.2.2.1.1 | 15.9.0 |
| 2020-09 | RAN#89 | R5s201118 | 1222 | - | F | Correction to NR Idle Mode test case 6.4.2.2 | 15.9.0 |
| 2020-09 | RAN#89 | R5s201120 | 1224 | - | F | Correction for NR Idle mode test case 6.1.1.1 | 15.9.0 |
| 2020-09 | RAN#89 | R5s201121 | 1225 | - | F | Correction for PDU SESSION AUTHENTICATION COMMAND | 15.9.0 |
| 2020-09 | RAN#89 | R5s201124 | 1227 | - | F | Correction to NR5GC test case 8.1.3.1.11 and 8.1.3.1.12 | 15.9.0 |
| 2020-09 | RAN#89 | R5s201125 | 1228 | - | F | Correction to NR5GC IRAT test case 8.1.3.2.4 | 15.9.0 |
| 2020-09 | RAN#89 | R5s201127 | 1230 | - | F | Correction to the ENDC testcases 8.2.2.x.1 and 8.2.3.13.1 | 15.9.0 |
| 2020-09 | RAN#89 | R5s201128 | 1231 | - | F | Correction to NR5GC test case 9.1.1.6 | 15.9.0 |
| 2020-09 | RAN#89 | R5s201129 | 1232 | - | F | Correction to NR5GC test case 9.1.7.2 | 15.9.0 |
| 2020-09 | RAN#89 | R5s201132 | 1236 | - | F | Correction to function f_NR_UE_DeRegisterOnSwitchOff | 15.9.0 |
| 2020-09 | RAN#89 | R5s201134 | 1238 | - | F | Correction to NR5GC test case 9.1.5.1.9 | 15.9.0 |
| 2020-09 | RAN#89 | R5s201136 | 1240 | - | B | NR5GC FR1 : Addition of NR5GC RRC test case 8.1.5.2.2 | 15.9.0 |
| 2020-09 | RAN#89 | R5s201138 | 1241 | - | F | Correction to NR5GC test case 9.1.5.1.9 | 15.9.0 |
| 2020-09 | RAN#89 | R5s201139 | 1242 | - | B | Addition of NR5GC test case 6.1.2.21 in FR1 | 15.9.0 |
| 2020-09 | RAN#89 | R5s201141 | 1243 | - | F | Correction to NR5GC test case 9.1.4.1 | 15.9.0 |
| 2020-09 | RAN#89 | R5s201142 | 1244 | - | F | Correction to NR5GC testcase 9.1.5.1.3 | 15.9.0 |
| 2020-09 | RAN#89 | R5s201143 | 1245 | - | F | Correction to NR5GC test case 9.1.7.1 | 15.9.0 |
| 2020-09 | RAN#89 | R5s201144 | 1246 | - | B | NR5GC FR1 : Addition of NR MAC test case 7.1.1.4.2.5 | 15.9.0 |
| 2020-09 | RAN#89 | R5s201146 | 1247 | - | B | NR5GC FR1 : Addition of NR5GC RRC test case 8.1.2.1.5.1 | 15.9.0 |
| 2020-09 | RAN#89 | R5s201148 | 1248 | - | B | NR5GC FR1 : Addition of NR5GC RRC test case 8.1.2.1.5.2 | 15.9.0 |
| 2020-09 | RAN#89 | R5s201150 | 1249 | - | F | Correction to NR5GC test case 7.1.1.1.1 | 15.9.0 |
| 2020-09 | RAN#89 | R5s201158 | 0901 | 1 | F | Correction to NR5GC RRC test case 8.1.3.1.10 | 15.9.0 |
| 2020-09 | RAN#89 | R5s201159 | 0964 | 1 | F | Correction to NR5GC IRAT test case 8.1.3.3.2 | 15.9.0 |
| 2020-09 | RAN#89 | R5s201160 | 0981 | 1 | B | Addition of NR5GC test case 6.3.1.8 in FR1 | 15.9.0 |
| 2020-09 | RAN#89 | R5s201161 | 0982 | 1 | B | Addition of NR5GC test case 11.3.4 in FR1 | 15.9.0 |
| 2020-09 | RAN#89 | R5s201162 | 0984 | 1 | B | Addition of NR5GC test case 6.3.1.9 in FR1 | 15.9.0 |
| 2020-09 | RAN#89 | R5s201163 | 0988 | 1 | F | Corrections for some NR5GC test cases when pc_NoOf_PDUs = 0 and pc_noOf_PDUsNewConnection > 0 | 15.9.0 |
| 2020-09 | RAN#89 | R5s201164 | 1011 | 1 | B | Addition of NR5GC test case 6.1.2.23 in FR1 | 15.9.0 |
| 2020-09 | RAN#89 | R5s201165 | 1013 | 1 | F | Correction to 5GMM test case 9.1.5.1.11 | 15.9.0 |
| 2020-09 | RAN#89 | R5s201166 | 1022 | 1 | F | Correction to NR5GC test case 6.2.3.5 | 15.9.0 |
| 2020-09 | RAN#89 | R5s201167 | 1023 | 1 | F | Correction to function f_EUTRA38_NR_InitialRegistration | 15.9.0 |
| 2020-09 | RAN#89 | R5s201168 | 1025 | 1 | B | Addition of NR5GC test case 7.1.1.5.3 in FR1 | 15.9.0 |
| 2020-09 | RAN#89 | R5s201169 | 1026 | 1 | B | Addition of ENDC test case 7.1.1.5.3 in FR1 | 15.9.0 |

| | | | | | | | |
|---|---|---|---|---|---|---|---|
| 2020-09 | RAN#89 | R5s201170 | 1030 | 1 | B | Addition of NR5GC test case 8.1.3.1.11 in FR1 | 15.9.0 |
| 2020-09 | RAN#89 | R5s201171 | 1031 | 1 | F | Correction for AT command format for S-NSSAI | 15.9.0 |
| 2020-09 | RAN#89 | R5s201173 | 1033 | 1 | B | Addition of NR5GC IRAT test case 8.1.1.3.4 in FR1 | 15.9.0 |
| 2020-09 | RAN#89 | R5s201174 | 1255 | - | F | Correction to ENDC testcase 8.2.2.9.1 | 15.9.0 |
| 2020-09 | RAN#89 | R5s201180 | 1034 | 1 | F | Correction to NR Idle Mode test case 6.1.1.1 | 15.9.0 |
| 2020-09 | RAN#89 | R5s201181 | 1035 | 1 | F | Correction to NR5GC testcase 6.2.3.6 | 15.9.0 |
| 2020-09 | RAN#89 | R5s201182 | 1039 | 1 | B | Addition of NR5GC IRAT test case 8.1.4.2.2.1 in FR1 | 15.9.0 |
| 2020-09 | RAN#89 | R5s201183 | 1041 | 1 | F | Correction to NR MAC test case 7.1.1.1.1a | 15.9.0 |
| 2020-09 | RAN#89 | R5s201187 | 1260 | - | F | Correction to ENDC RLC Testcase 7.1.2.2.6 | 15.9.0 |
| 2020-09 | RAN#89 | R5s201188 | 1042 | 1 | F | Correction to NR Idle mode test case 6.4.1.2 | 15.9.0 |
| 2020-09 | RAN#89 | R5s201189 | 1045 | 1 | F | Correction to search space config | 15.9.0 |
| 2020-09 | RAN#89 | R5s201190 | 1048 | 1 | F | Correction to selection expression | 15.9.0 |
| 2020-09 | RAN#89 | R5s201191 | 1049 | 1 | F | Correction to 5GMM test case 9.1.4.1 | 15.9.0 |
| 2020-09 | RAN#89 | R5s201192 | 1050 | 1 | F | Correction for 5GMM test case 9.1.5.1.10 | 15.9.0 |
| 2020-09 | RAN#89 | R5s201193 | 1055 | 1 | F | Correction to EN-DC RRC test cases 8.2.2.8.1 and 8.2.3.13.1 | 15.9.0 |
| 2020-09 | RAN#89 | R5s201194 | 1058 | 1 | F | Correction to NR5GC test case 10.1.2.2 | 15.9.0 |
| 2020-09 | RAN#89 | R5s201195 | 1059 | 1 | F | Correction to NR5GC testcase 10.1.1.1 | 15.9.0 |
| 2020-09 | RAN#89 | R5s201196 | 1064 | 1 | F | Correction to NR MAC test case 7.1.1.3.1 | 15.9.0 |
| 2020-09 | RAN#89 | R5s201197 | 1065 | 1 | F | Correction for NR MAC test case 7.1.1.3.5 | 15.9.0 |
| 2020-09 | RAN#89 | R5s201198 | 1070 | 1 | F | Correction to NR5GC test case 9.1.6.1.3 | 15.9.0 |
| 2020-09 | RAN#89 | R5s201199 | 1071 | 1 | F | Correction to NR5GC IRAT test case 8.1.4.2.1.1 | 15.9.0 |
| 2020-09 | RAN#89 | R5s201200 | 1072 | 1 | F | Correction to NR5GC IRAT test case 6.4.3.1 | 15.9.0 |
| 2020-09 | RAN#89 | R5s201201 | 1074 | 1 | F | Correction to the NR5GC test case 6.1.2.7 | 15.9.0 |
| 2020-09 | RAN#89 | R5s201202 | 1075 | 1 | F | Correction to the NR5GC test case 9.1.5.2.1 | 15.9.0 |
| 2020-09 | RAN#89 | R5s201203 | 1076 | 1 | F | Correction to the NR5GC test case 9.1.5.2.2 | 15.9.0 |
| 2020-09 | RAN#89 | R5s201204 | 1077 | 1 | F | Correction to the NR5GC test case 6.1.2.8 | 15.9.0 |
| 2020-09 | RAN#89 | R5s201205 | 1084 | 1 | F | Correction to NR5GC test case 9.1.5.2.4 | 15.9.0 |
| 2020-09 | RAN#89 | R5s201206 | 1086 | 1 | F | Correction to function f_TC_9_1_2_x_Common | 15.9.0 |
| 2020-09 | RAN#89 | R5s201207 | 1093 | 1 | F | Corrections for 5GMM test case 9.1.5.1.14 | 15.9.0 |
| 2020-09 | RAN#89 | R5s201208 | 1095 | 1 | F | Correction to 5GMM test case 9.1.5.1.1 | 15.9.0 |
| 2020-09 | RAN#89 | R5s201209 | 1096 | 1 | F | Correction to NR5GC test case 9.1.2.x | 15.9.0 |
| 2020-09 | RAN#89 | R5s201210 | 1097 | 1 | F | Correction to NR5GC test case 9.1.6.1.2 | 15.9.0 |
| 2020-09 | RAN#89 | R5s201211 | 1098 | 1 | F | Correction to NR5GC test case 8.1.4.2.1.1 | 15.9.0 |
| 2020-09 | RAN#89 | R5s201212 | 1099 | 1 | F | Correction to the NR5GC testcase 6.1.2.2 | 15.9.0 |
| 2020-09 | RAN#89 | R5s201213 | 1101 | 1 | F | Correction to the definition of NR_FrequencyBand_Type | 15.9.0 |
| 2020-09 | RAN#89 | R5s201214 | 1102 | 1 | F | Correction to the function f_NR5GC_RRC_Idle_Steps5_9_AKA | 15.9.0 |
| 2020-09 | RAN#89 | R5s201215 | 1103 | 1 | F | Correction to NR5GC test case 6.1.1.7 | 15.9.0 |
| 2020-09 | RAN#89 | R5s201216 | 1104 | 1 | F | Correction to NR5GC test case 6.2.1.1 | 15.9.0 |

| | | | | | | | |
|---|---|---|---|---|---|---|---|
| | | | | | | | |

| | | | | | | | |
|---|---|---|---|---|---|---|---|
| 2020-09 | RAN#89 | R5s201217 | 1105 | 1 | F | Correction to NR5GC test case 6.2.1.2 | 15.9.0 |
| 2020-09 | RAN#89 | R5s201219 | 1111 | 1 | B | Addition of NR5GC IRAT test case 8.1.5.5.1 in FR1 | 15.9.0 |
| 2020-09 | RAN#89 | R5s201221 | 1262 | - | B | NR5GC FR1 : Addition of NR5GC RRC test case 8.1.4.1.6 | 15.9.0 |
| 2020-09 | RAN#89 | R5s201264 | 0996 | 1 | F | Corrections for NR5GC IRAT test case 8.1.4.2.1.1 | 15.9.0 |
| 2020-09 | RAN#89 | R5s201265 | 1014 | 1 | B | EN-DC FR2 : Addition of NR MAC test case 7.1.1.5.1 | 15.9.0 |
| 2020-09 | RAN#89 | R5s201266 | 1015 | 1 | B | EN-DC FR1 : Addition of NR MAC test case 7.1.1.5.1 | 15.9.0 |
| 2020-09 | RAN#89 | R5s201267 | 1107 | 1 | F | Correction to NR Idle mode test case 6.4.2.2 | 15.9.0 |
| 2020-09 | RAN#89 | R5s201268 | 1108 | 1 | F | Correction to NR5GC RRC test case 8.1.5.4.1 | 15.9.0 |
| 2020-09 | RAN#89 | R5s201269 | 1118 | 1 | F | Correction to NR5GC testcase 10.1.6.1 | 15.9.0 |
| 2020-09 | RAN#89 | R5s201270 | 1119 | 1 | F | Correction to NR5GC testcase 10.1.6.2 | 15.9.0 |
| 2020-09 | RAN#89 | R5s201271 | 1121 | 1 | F | Correction to NR5GC test case 6.4.3.1 | 15.9.0 |
| 2020-09 | RAN#89 | R5s201272 | 1122 | 1 | B | NR5GC FR1 : Addition of NR MAC test case 7.1.1.5.1 | 15.9.0 |
| 2020-09 | RAN#89 | R5s201274 | 1123 | 1 | F | Correction to the function f_NR_ENDC_ReConfigAM_UM | 15.9.0 |
| 2020-09 | RAN#89 | R5s201275 | 0926 | 1 | F | Corrections for NR5GC IRAT common functions | 15.9.0 |
| 2020-09 | RAN#89 | R5s201276 | 0944 | 1 | B | NR5GC FR1 : Addition of NR Idle Mode test case 6.1.2.11 | 15.9.0 |
| 2020-09 | RAN#89 | R5s201277 | 1005 | 1 | B | Addition of NR5GC test case 8.1.3.1.20 in FR1 | 15.9.0 |
| 2020-09 | RAN#89 | R5s201279 | 1018 | 1 | F | Correction for NR MAC test case 7.1.1.2.1 in NR5GC operation | 15.9.0 |
| 2020-09 | RAN#89 | R5s201280 | 1019 | 1 | F | Correction to NR Idle Mode test case 6.1.1.2 | 15.9.0 |
| 2020-09 | RAN#89 | R5s201281 | 1029 | 1 | B | Addition of NR5GC test case 9.1.5.1.9 in FR1 | 15.9.0 |
| 2020-09 | RAN#89 | R5s201283 | 1036 | 1 | F | Correction to NR5GC testcase 7.1.1.1.2 | 15.9.0 |
| 2020-09 | RAN#89 | R5s201284 | 1037 | 1 | B | Addition of NR5GC test case 8.1.3.1.12 in FR1 | 15.9.0 |
| 2020-09 | RAN#89 | R5s201285 | 1040 | 1 | B | Addition of NR5GC test case 6.2.1.5 in FR1 | 15.9.0 |
| 2020-09 | RAN#89 | R5s201289 | 1046 | 1 | B | Addition of ENDC test case 7.1.1.5.2 in FR1 | 15.9.0 |
| 2020-09 | RAN#89 | R5s201290 | 1052 | 1 | F | Correction for NR5GC IRAT test cases 8.1.3.2.3 and 8.1.3.2.4 | 15.9.0 |
| 2020-09 | RAN#89 | R5s201291 | 1060 | 1 | B | Addition of NR5GC test case 7.1.1.5.2 in FR1 | 15.9.0 |
| 2020-09 | RAN#89 | R5s201292 | 1061 | 1 | B | Addition of NR5GC  test case 7.1.1.5.4 in FR1 | 15.9.0 |
| 2020-09 | RAN#89 | R5s201293 | 1062 | 1 | B | Addition of ENDC test case 7.1.1.5.4 in FR1 | 15.9.0 |
| 2020-09 | RAN#89 | R5s201294 | 1066 | 1 | F | Correction to NR5GC RRC test case 8.1.5.1.1 | 15.9.0 |
| 2020-09 | RAN#89 | R5s201295 | 1081 | 1 | B | Addition of NR5GC test case 6.2.2.1 in FR1 | 15.9.0 |
| 2020-09 | RAN#89 | R5s201296 | 1082 | 1 | B | Addition of NR5GC test case 6.2.2.2 in FR1 | 15.9.0 |
| 2020-09 | RAN#89 | R5s201297 | 1085 | 1 | F | Correction to NR5GC test case 9.1.5.1.1 | 15.9.0 |
| 2020-09 | RAN#89 | R5s201298 | 1087 | 1 | F | Correction to NR5GC testcase 10.1.1.2 | 15.9.0 |
| 2020-09 | RAN#89 | R5s201299 | 1100 | 1 | F | Correction to NR5GC test case 6.1.2.9 | 15.9.0 |
| 2020-09 | RAN#89 | R5s201300 | 1109 | 1 | F | Corrections for NR5GC IRAT test cases | 15.9.0 |
| 2020-09 | RAN#89 | R5s201301 | 1284 | - | F | Add new verified and e-mail agreed TTCN test cases in the TC lists in 38.523-3 (prose), Annex A | 15.9.0 |
| 2020-09 | RAN#89 | R5-204475 | 1233 | 1 | F | 5G Test Models updates | 15.9.0 |
| 2020-12 | RAN#90 | R5s201346 | 1304 | - | B | ENDC FR2: Addition of NR MAC test case 7.1.1.5.3 | 15.10.0 |

| | | | | | | | |
|---|---|---|---|---|---|---|---|
| 2020-12 | RAN#90 | R5s201350 | 1306 | - | F | Correction for NR PDCP test cases in EN-DC | 15.10.0 |
| 2020-12 | RAN#90 | R5s201351 | 1307 | - | F | Correction for NR band N257 | 15.10.0 |
| 2020-12 | RAN#90 | R5s201354 | 1308 | - | F | Correction to the NR function f_EUTRA38_IRAT_Init | 15.10.0 |
| 2020-12 | RAN#90 | R5s201355 | 1309 | - | F | Correction to the NR function f_NR_GetSSB_ToMeasureSIB2 | 15.10.0 |
| 2020-12 | RAN#90 | R5s201356 | 1310 | - | F | Correction to NR5GC test case 9.1.5.1.3 in FR1 | 15.10.0 |
| 2020-12 | RAN#90 | R5s201357 | 1311 | - | F | Correction to NR5GC test case 9.1.1.3 in FR1 | 15.10.0 |
| 2020-12 | RAN#90 | R5s201358 | 1312 | - | F | Correction to multiple NR functions | 15.10.0 |
| 2020-12 | RAN#90 | R5s201359 | 1313 | - | F | Correction to NR5GC common function f_NR_GetSCGConfigResume | 15.10.0 |
| 2020-12 | RAN#90 | R5s201361 | 1315 | - | F | Correction to NR5GC Test cases related to Multiple QoS | 15.10.0 |
| 2020-12 | RAN#90 | R5s201362 | 1316 | - | F | Correction to NR5GC testcase 10.1.6.2 | 15.10.0 |
| 2020-12 | RAN#90 | R5s201363 | 1317 | - | F | Correction to function f_EUTRA38_TAUReqFromN1 | 15.10.0 |
| 2020-12 | RAN#90 | R5s201366 | 1318 | - | F | Correction to function f_NR_ReceiveMeasurementReports | 15.10.0 |
| 2020-12 | RAN#90 | R5s201367 | 1319 | - | F | Correction to NR SDAP testcases 7.1.4.1 and 7.1.4.2 | 15.10.0 |
| 2020-12 | RAN#90 | R5s201368 | 1320 | - | F | Correction to NR Idle mode testcases | 15.10.0 |
| 2020-12 | RAN#90 | R5s201370 | 1322 | - | F | Correction to test case applicability | 15.10.0 |
| 2020-12 | RAN#90 | R5s201371 | 1323 | - | F | Corrections for 5GSM test case 10.1.1.1 | 15.10.0 |
| 2020-12 | RAN#90 | R5s201373 | 1325 | - | F | Corrections for EN-DC test cases with data path check | 15.10.0 |
| 2020-12 | RAN#90 | R5s201379 | 1327 | - | F | Correction to NR5GC testcase 10.1.6.1 | 15.10.0 |
| 2020-12 | RAN#90 | R5s201380 | 1328 | - | F | Correction to NR5GC Inter-RAT testcase 6.4.3.1 | 15.10.0 |
| 2020-12 | RAN#90 | R5s201381 | 1329 | - | F | Correction to the NR5GC testcase 9.1.5.1.9 | 15.10.0 |
| 2020-12 | RAN#90 | R5s201382 | 1330 | - | F | Correction to function f_Get_PDUSessionAuthenticationCmd | 15.10.0 |
| 2020-12 | RAN#90 | R5s201383 | 1331 | - | F | Correction to NR5GC testcase 9.3.1.3 | 15.10.0 |
| 2020-12 | RAN#90 | R5s201384 | 1332 | - | F | Correction to function f_NG_SMS_AT_Config_WithPowering_EnterState_0B | 15.10.0 |
| 2020-12 | RAN#90 | R5s201385 | 1333 | - | F | Correction to NR testcases 8.1.3.1.11, 8.1.3.1.12 and 8.1.3.1.15A | 15.10.0 |
| 2020-12 | RAN#90 | R5s201389 | 1335 | - | F | Correction to the NR5GC testcase 6.2.3.3 | 15.10.0 |
| 2020-12 | RAN#90 | R5s201390 | 1336 | - | F | Correction to the NR5GC testcase 8.1.4.2.1.1 | 15.10.0 |
| 2020-12 | RAN#90 | R5s201410 | 1337 | - | F | Correction to NR5GC testcase 9.1.1.1 | 15.10.0 |
| 2020-12 | RAN#90 | R5s201411 | 1338 | - | F | Correction to the NR5GC testcase 9.1.5.1.3a | 15.10.0 |
| 2020-12 | RAN#90 | R5s201412 | 1339 | - | F | Correction to NR5GC testcase 10.1.1.1 | 15.10.0 |
| 2020-12 | RAN#90 | R5s201416 | 1341 | - | F | Correction to NR5GC testcase 9.1.5.2.1 | 15.10.0 |
| 2020-12 | RAN#90 | R5s201418 | 1343 | - | F | Correction to NR5GC test case 6.3.1.9 | 15.10.0 |
| 2020-12 | RAN#90 | R5s201419 | 1344 | - | F | Correction to NR5GC IRAT test case 6.2.3.9 | 15.10.0 |
| 2020-12 | RAN#90 | R5s201420 | 1345 | - | F | Correction to EN-DC RRC test case 8.2.3.3.1 | 15.10.0 |
| 2020-12 | RAN#90 | R5s201421 | 1346 | - | F | Correction to OffsetCarrierCORESET#0 for several NR bands for frequencies in mid-range | 15.10.0 |
| 2020-12 | RAN#90 | R5s201422 | 1347 | - | F | Correction to NR5GC test case 6.1.2.13 | 15.10.0 |
| 2020-12 | RAN#90 | R5s201423 | 1348 | - | F | Correction to NR5GC test case 6.1.2.19 | 15.10.0 |

| | | | | | | | |
|---|---|---|---|---|---|---|---|
| | | | | | | | |

| | | | | | | | |
|---|---|---|---|---|---|---|---|
| 2020-12 | RAN#90 | R5s201424 | 1349 | - | F | Correction to NR5GC test case 9.1.4.1 | 15.10.0 |
| 2020-12 | RAN#90 | R5s201434 | 1351 | - | F | Correction to NR RLC testcase 7.1.2.3.8 | 15.10.0 |
| 2020-12 | RAN#90 | R5s201435 | 1352 | - | F | Correction to EN-DC RRC test case 8.2.2.6.1 | 15.10.0 |
| 2020-12 | RAN#90 | R5s201436 | 1353 | - | F | Correction to NR MAC test case 7.1.1.5.2 | 15.10.0 |
| 2020-12 | RAN#90 | R5s201437 | 1354 | - | F | Correction to NR MAC test case 7.1.1.5.4 | 15.10.0 |
| 2020-12 | RAN#90 | R5s201442 | 1355 | - | F | Correction to NR5GC test case 6.3.1.5 | 15.10.0 |
| 2020-12 | RAN#90 | R5s201443 | 1356 | - | F | Correction to NR5GC test case 9.1.5.2.9 | 15.10.0 |
| 2020-12 | RAN#90 | R5s201444 | 1357 | - | F | Correction to NR5GC test case 6.1.1.2 | 15.10.0 |
| 2020-12 | RAN#90 | R5s201450 | 1360 | - | B | Addition of NR5GC test case 8.1.3.1.23 in FR1 | 15.10.0 |
| 2020-12 | RAN#90 | R5s201453 | 1365 | - | F | Correction to function fl_NR_ENDC_UECapabilityTransfer | 15.10.0 |
| 2020-12 | RAN#90 | R5s201454 | 1366 | - | F | Correction to NR5GC test case 7.1.1.1.2 | 15.10.0 |
| 2020-12 | RAN#90 | R5s201457 | 1368 | - | B | Addition of NR5GC test case 7.1.1.9.1 in FR1 | 15.10.0 |
| 2020-12 | RAN#90 | R5s201461 | 1370 | - | F | Correction to NR5GC RRC test case 8.1.1.4.1 | 15.10.0 |
| 2020-12 | RAN#90 | R5s201463 | 1372 | - | F | Corrections for NR5GC CA test cases | 15.10.0 |
| 2020-12 | RAN#90 | R5s201464 | 1373 | - | F | Correction for EN-DC RRC test case 8.2.2.1.1 | 15.10.0 |
| 2020-12 | RAN#90 | R5s201469 | 1378 | - | F | Correction to NR MAC test case 7.1.1.1.1a | 15.10.0 |
| 2020-12 | RAN#90 | R5s201472 | 1381 | - | F | Correction to NR5GC idle mode test case 6.1.2.14 | 15.10.0 |
| 2020-12 | RAN#90 | R5s201474 | 1383 | - | F | Corrections to NR5GC RRC test cases 8.1.3.1.x | 15.10.0 |
| 2020-12 | RAN#90 | R5s201475 | 1384 | - | F | Correction to NR5GC RRC test case 8.1.1.3.3 | 15.10.0 |
| 2020-12 | RAN#90 | R5s201477 | 1386 | - | F | Correction to EN-DC RRC test case 8.2.2.8.1 | 15.10.0 |
| 2020-12 | RAN#90 | R5s201479 | 1388 | - | B | EN-DC FR1 : Addition of NR MAC test case 7.1.1.4.2.3 | 15.10.0 |
| 2020-12 | RAN#90 | R5s201481 | 1390 | - | F | Correction to NR MAC test case 7.1.1.5.1 | 15.10.0 |
| 2020-12 | RAN#90 | R5s201512 | 1408 | - | F | Correction to NR5GC test case 7.1.1.2.4 | 15.10.0 |
| 2020-12 | RAN#90 | R5s201513 | 1409 | - | F | Correction to NR5GC testcase 6.1.2.2 | 15.10.0 |
| 2020-12 | RAN#90 | R5s201515 | 1411 | - | B | ENDC FR1: Addition of Inter band CA RRC test case 8.2.4.3.1.3 | 15.10.0 |
| 2020-12 | RAN#90 | R5s201526 | 1417 | - | F | Summary of regression errors for NR5GC ATS in 20wk43 IWD | 15.10.0 |
| 2020-12 | RAN#90 | R5s201527 | 1418 | - | F | Correction to NR5GC test case 6.2.3.2 | 15.10.0 |
| 2020-12 | RAN#90 | R5s201528 | 1419 | - | F | Correction to function f_NR5GC_RRC_Idle_Steps16_20 | 15.10.0 |
| 2020-12 | RAN#90 | R5s201530 | 1420 | - | F | Correction to NR5GC testcase 7.1.2.3.5 and 7.1.2.3.5a | 15.10.0 |
| 2020-12 | RAN#90 | R5s201531 | 1421 | - | F | Correction to template cr_NG_GMM_CapAny for 20wk43 IWD | 15.10.0 |
| 2020-12 | RAN#90 | R5s201532 | 1422 | - | F | Correction to f_NR5GC_PDUSessionEstablishment_InnerLoop for 20wk43 IWD | 15.10.0 |
| 2020-12 | RAN#90 | R5s201546 | 1435 | - | F | Correction for EN-DC test cases in postamble | 15.10.0 |
| 2020-12 | RAN#90 | R5s201555 | 1043 | 1 | F | Correction to NR5GC testcase 9.1.5.1.10 | 15.10.0 |
| 2020-12 | RAN#90 | R5s201556 | 1051 | 1 | F | Correction to 5GMM test case 9.1.5.1.13 | 15.10.0 |
| 2020-12 | RAN#90 | R5s201557 | 1130 | 1 | F | Correction to 5GMM test case 9.3.1.2 | 15.10.0 |
| 2020-12 | RAN#90 | R5s201558 | 1148 | 1 | F | Correction to NR5GC test case 8.1.1.3.4 | 15.10.0 |
| 2020-12 | RAN#90 | R5s201559 | 1166 | 1 | F | Correction to NR5GC test case 9.1.5.1.3 | 15.10.0 |

| | | | | | | | |
|---|---|---|---|---|---|---|---|
| 2020-12 | RAN#90 | R5s201560 | 1173 | 1 | B | Addition of NR5GC test case 6.3.1.5 in FR1 | 15.10.0 |
| 2020-12 | RAN#90 | R5s201561 | 1184 | 1 | F | Corrections for EN-DC RRC test case 8.2.2.6.1 | 15.10.0 |
| 2020-12 | RAN#90 | R5s201562 | 1188 | 1 | F | Correction to 5GMM test case 9.1.8.1 | 15.10.0 |
| 2020-12 | RAN#90 | R5s201563 | 1191 | 1 | F | Corrections for NR5GC IRAT test case 8.1.4.2.2.1 | 15.10.0 |
| 2020-12 | RAN#90 | R5s201564 | 1200 | 1 | F | Correction for NR5GC IRAT test cases | 15.10.0 |
| 2020-12 | RAN#90 | R5s201566 | 1201 | 1 | F | Correction for NR5GC IRAT test cases | 15.10.0 |
| 2020-12 | RAN#90 | R5s201567 | 1207 | 1 | F | Correction for 5GMM test case 9.1.5.1.9 | 15.10.0 |
| 2020-12 | RAN#90 | R5s201568 | 1210 | 1 | B | EN-DC FR2 : Addition of NR MAC test case 7.1.1.5.2 | 15.10.0 |
| 2020-12 | RAN#90 | R5s201569 | 1211 | 1 | B | EN-DC FR2 : Addition of NR MAC test case 7.1.1.5.4 | 15.10.0 |
| 2020-12 | RAN#90 | R5s201570 | 1237 | 1 | F | Correction to the PDU Session Establishment Accept message | 15.10.0 |
| 2020-12 | RAN#90 | R5s201571 | 1239 | 1 | F | Correction to ENDC test case 8.2.2.6.1 | 15.10.0 |
| 2020-12 | RAN#90 | R5s201572 | 1251 | 1 | F | Corrections to NR5GC SoR test case 6.3.1.9 | 15.10.0 |
| 2020-12 | RAN#90 | R5s201573 | 1252 | 1 | F | Correction to the NR5GC testcase 8.1.3.1.12 | 15.10.0 |
| 2020-12 | RAN#90 | R5s201574 | 1253 | 1 | B | NR5GC FR1: Addition of Intra-band non Contiguous NR RRC CA test case 8.1.3.1.18.3 | 15.10.0 |
| 2020-12 | RAN#90 | R5s201575 | 1258 | 1 | B | Addition of NR5GC test case 9.1.8.2 in FR1 | 15.10.0 |
| 2020-12 | RAN#90 | R5s201577 | 1261 | 1 | F | Correction to the ENDC Test cases 8.2.3.16.1 and 8.2.2.1.1 | 15.10.0 |
| 2020-12 | RAN#90 | R5s201578 | 1263 | 1 | F | Correction to the NR5GC EAP common part | 15.10.0 |
| 2020-12 | RAN#90 | R5s201579 | 1264 | 1 | F | Correction to NR5GC testcase 9.1.5.1.3 | 15.10.0 |
| 2020-12 | RAN#90 | R5s201580 | 1266 | 1 | F | Correction to NR5GC testcase 9.1.3.1 | 15.10.0 |
| 2020-12 | RAN#90 | R5s201581 | 1267 | 1 | F | Correction to the NR5GC testcase 10.1.4.1 | 15.10.0 |
| 2020-12 | RAN#90 | R5s201582 | 1269 | 1 | B | ENDC FR2: Addition of NR RRC test case 8.2.6.2.1 | 15.10.0 |
| 2020-12 | RAN#90 | R5s201584 | 1276 | 1 | F | Correction to NR5GC testcase 9.1.8.1 | 15.10.0 |
| 2020-12 | RAN#90 | R5s201592 | 1283 | 1 | F | Correction to the NR5GC testcase 7.1.1.2.3 | 15.10.0 |
| 2020-12 | RAN#90 | R5s201593 | 1285 | 1 | F | Correction to common functions for ENDC RRC test case 8.2.1.1.1 and NR5GC test case 8.1.5.1.1 | 15.10.0 |
| 2020-12 | RAN#90 | R5s201594 | 1286 | 1 | F | Correction to the NR5GC testcase 8.1.4.1.2 | 15.10.0 |
| 2020-12 | RAN#90 | R5s201595 | 1287 | 1 | F | Correction to 5GSM test case 10.1.4.1 | 15.10.0 |
| 2020-12 | RAN#90 | R5s201596 | 1288 | 1 | F | Correction to NR5GC idle mode test case 6.1.2.23 | 15.10.0 |
| 2020-12 | RAN#90 | R5s201597 | 1289 | 1 | F | Correction to NR5GC idle mode test case 6.4.1.1 | 15.10.0 |
| 2020-12 | RAN#90 | R5s201601 | 1293 | 1 | F | Correction ENDC MAC testcase 7.1.1.1.2 | 15.10.0 |
| 2020-12 | RAN#90 | R5s201603 | 1294 | 1 | F | Correction to the UE capability transfer testcases 8.2.1.1.1 and 8.1.5.1.1 | 15.10.0 |
| 2020-12 | RAN#90 | R5s201604 | 1297 | 1 | F | Correction to the NR5GC CA testcase 8.1.2.1.5.1 | 15.10.0 |
| 2020-12 | RAN#90 | R5s201605 | 1298 | 1 | F | Correction to the NR function f_Get_NG_PDUSessionEstablishmentAccept | 15.10.0 |
| 2020-12 | RAN#90 | R5s201606 | 1301 | 1 | F | Correction to ENDC testcase 7.1.2.3.11 | 15.10.0 |
| 2020-12 | RAN#90 | R5s201623 | 1278 | 1 | B | NR5GC FR1 : Addition of NR RRC CA test case 8.1.4.1.7.1 | 15.10.0 |
| 2020-12 | RAN#90 | R5s201624 | 1279 | 1 | B | NR5GC FR1 : Addition of NR RRC CA test case 8.1.4.1.7.2 | 15.10.0 |

| | | | | | | | |
|---|---|---|---|---|---|---|---|
| 2020-12 | RAN#90 | R5s201625 | 1280 | 1 | F | Correction to ENDC testcase 8.2.6.2.1 | 15.10.0 |
| 2020-12 | RAN#90 | R5s201627 | 1292 | 1 | B | EN-DC FR1 :Addition of RRC test case 8.2.4.3.1.1 | 15.10.0 |
| 2020-12 | RAN#90 | R5s201628 | 1299 | 1 | F | Correction to NR RLC testcases 7.1.2.3.7 and 7.1.2.3.8 | 15.10.0 |
| 2020-12 | RAN#90 | R5s201636 | 1235 | 1 | F | Correction to NR5GC testcase 10.1.3.2 | 15.10.0 |
| 2020-12 | RAN#90 | R5s201646 | 1452 | - | F | Add new verified and e-mail agreed TTCN test cases in the TC lists in 38.523-3 (prose), Annex A | 15.10.0 |
| 2020-12 | RAN#90 | R5-206369 | 1362 | 1 | - | 5G Test Models updates | 15.10.0 |
| 2020-12 | RAN#90 | R5s201387 | 1334 | - | F | Rel-16 Sep'20 baseline upgrade for 5GS Test Suites | 16.0.0 |